

TRAVIS BODY & TRAILER, INC.

UNIVERSAL
TRUCK TRAILER
OWNER'S MANUAL

REV 2/2015

Contents

Section		page
I.	Welcome	1
II.	How to use this manual	1
III.	Warranty	2
IV.	Identification (Serial Number Location)	5
V.	Critical Information Relating to Dump Trailers	6
VI.	Operation of Bottom Dump Trailers	8
VII.	Operations and Information Relating to All Trailers	9
VIII.	General Guidelines for Operating Truck and Trailer	12
IX.	Tailgate Operation, End Dump Trailers	17
X.	Dump Trailer Hoist Operation	18
XI.	Procedures for Trailer Maintenance	20
	- Kingpin and Upper Coupler	20
	- Wheel and Rim Care	20
	- Spoke Wheel Torque Procedure and Rim Alignment	21
	- Disc Type Wheel Torquing Procedure	24
	- Pilot Mounted Wheel Torquing Procedure	24
	- Tires and Tire Care	24
	- Wheel Bearing Maintenance and Adjustment	35
	- Axle Alignment	36
	- Hutch 9700 Torque Requirements	37
	- Reyco 21-B Torque Requirements	37
	- HT Series Torque Specifications	38
	- Hutch 900 Torque Requirements	38
	- Care and Maintenance of Leaf Springs	38
	- Maintaining an Air Ride Suspension	39
	- Air Brake Maintenance	40
	- Reservoir Tank	40
	- Gladhands	40
	- Brake Tubing, Lines, Fittings and Hoses	41
	- Service and Spring Brake Chambers	41
	- Air Valves	41
	- Brake Adjustment	41
	- Automatic Slack Adjustors	42
	- Brake Drums	42
	- Brake Linings	42
	- Anti-lock Brakes	42
	- Hydraulic System Maintenance, Dump Trailers	42
	- Lights and Wiring	42
XII.	Lubrication	43
XIII.	Cleaning	47
XIV.	Other Manuals	47
XV.	Air Plumbing	47
XVI.	Troubleshooting	47
XVII.	Light Wiring Diagram (Typical)	53
XVIII.	Bottom Dump Operations	54
ADDENDUM – Steps, Ladders and Catwalks		58
ADDENDUM – Tote Dumper Operations		60
ADDENDUM – Polished Trailers		66

I. WELCOME

We welcome you as a Travis Body & Trailer, Inc. customer. Whether your purchase has been one of our many end dump designs, a bottom dump trailer, a high cube tipper or moving slat floor trailer or one of our other new or custom designed products, this manual contains information important to you.

Over the years Travis Body & Trailer, Inc. has become one of the largest companies specializing in designing and manufacturing dump trailer equipment. This leadership is based on customer confidence and satisfaction.

We suggest that even our many repeat customers take the time to review the contents of this manual. The manual contains important safety as well as maintenance and operational information relating to your trailer.

Any questions that you have may be answered by calling our toll free number 800-535-4372.

TRAVIS BODY & TRAILER, INC.
13955 FM 529
Houston, TX 77041
800 535-4372

II. HOW TO USE THIS OPERATOR'S MANUAL

Travis Body & Trailer Inc. builds a wide variety of bulk hauling trailers. Many of our customers require substantial customization that Travis is happy to provide. Therefore this manual is written to provide a general guideline for many different trailer configurations and specifications. While a complete guide is our intent, it is not possible to cover all of the possible designs in one manual.

Therefore, this manual contains not only information that is pertinent to your particular trailer but also information that is not. Using the index will enable you to quickly reference through the manual for the features that are on your trailer.

We have included certain safety tips that should be followed in the operation of this equipment. Clearly all possible scenarios cannot be mentioned or anticipated. It is the operators responsibility to use discretion and caution at all times to assure the safety of himself and others. Discipline, frequent inspections of the equipment and taking that important extra moment will go along way to lowering maintenance costs, increasing resale value and creating greater profitability in the long run.

Special, important notes and warnings have been highlighted throughout the manual as follows.

THIS MANUAL CONTAINS CAUTIONS AND WARNINGS THAT ARE NOT FOUND ON THE TRAILER. PLEASE READ AND OBSERVE ALL WARNINGS IN THIS MANUAL.

Your local Travis Body & Trailer, Inc. facility, or dealer, will be happy to answer any questions you may have about your new trailer and its operation.

III. EXAMPLE of TYPICAL TRAILER WARRANTY

The following is the typical warranty and language that was in use at the time this manual was prepared. The actual warranty that applies to your Travis manufactured equipment is the warranty that was provided at the time of purchase. The terms and conditions of the warranty provided varies from model to model and are subject to change from time to time.

LIMITED WARRANTY AND LIMITATIONS OF LIABILITY – typical language

1. Travis Body & Trailer warrants each new trailer or body manufactured to the original purchaser, to be free from defects in material and workmanship provided that the equipment warranted hereunder is operated by the purchaser in accordance with generally approved practices. Loads should not exceed the manufacturer's rated capacity or be abrasive or corrosive in nature.

2. Any parts of the equipment found to be defective within the warranty period shall be repaired or replaced (at Travis' option), at any Travis factory location or authorized service facility provided that the purchaser notifies Travis or any authorized distributor as soon as any defect becomes apparent. The period of the warranty is for one (1) year from the date of delivery of the equipment on certain models or up to 5 years under a partial coverage schedule (100% - year 1, 100% - year 2, 50% year - 3, 30% - year 4, and 20% - year 5) on other models. Coverage includes materials & labor. Please refer the specific warranty that was delivered with your trailer. Travis shall bear only the cost of replacing or repairing defective parts of the equipment.

3. All warranties, if any, extended to Travis by the makers and suppliers of component parts, accessories or other goods used in the manufacture of Travis equipment will be assigned, if contractually permitted, to the purchaser. Specific component warranty details will be provided to the purchaser upon request. Tire warranties shall be made directly from the tire manufacturer to the purchaser and are expressly excluded from Travis' warranty herein. All tarpaulins and components are limited to a 90 day warranty, unless a longer period is offered by the tarpaulins manufacturer. All floor liners and the installation of such liners are expressly excluded from this warranty. Notwithstanding any of the above, in no event will Travis extend a warranty for a component beyond the period that is provided by the component supplier such as may apply to hydraulic cylinders, valves, air cylinders, castings, suspension components, landing gear and the like even if the component suppliers warranty expires prior to the expiration of the Travis warranty period.

4. The purchaser agrees to return the defective equipment or parts to Travis' factory location or authorized service facility, freight paid, within 10 days after the defective condition is discovered.

5. This warranty also excludes the following: leaking or lack of a water-tight condition anywhere in the trailer body, normal wear and tear and deterioration of the equipment; maintenance items including, but not limited to, light bulbs, paint, brake linings, oil seals and bearings; used equipment sold "as is" and equipment that has been repaired, replaced or altered by someone other than Travis or one of its authorized representatives. This warranty excludes component failures that extend from continued use of the trailer after a defect has been identified or defects extending from the failure to inspect the equipment on a timely basis.

6. The sole liability of Travis and the exclusive remedy of the purchaser arising out of the manufacture, sale or use of the equipment provided hereunder, shall be limited to the cost of repair or replacement of defective parts as herein specified. Further, Travis' maximum liability hereunder arising from any cause whatsoever, including but not limited to, breach of contract or tort (including negligence), shall not exceed the contract price of the equipment furnished hereunder. Further, Travis shall not be responsible for work done, equipment or parts furnished or parts or repairs made by others unless the work is specifically ordered by Travis for the fulfillment of this warranty. In no event shall Travis be liable for removing defective parts or for reinstalling said parts when replaced by anyone other than Travis or an authorized service facility or for any costs incurred with such removal or reinstallation.

7. TRAVIS AND THE PURCHASER AGREE THAT, IN CONSIDERATION OF THE ABOVE EXPRESSED WARRANTY, ALL OTHER WARRANTIES OTHER THAN TITLE, EITHER EXPRESSED OR IMPLIED, WHETHER ARISING UNDER LAW OR EQUITY INCLUDING WARRANTIES OF MERCHANTABILITY AND FITNESS FOR A PARTICULAR PURPOSE ARE EXCLUDED FROM THIS CONTRACT. THE FOREGOING WARRANTY IS MADE SOLELY TO THE FIRST PURCHASER/USER FROM TRAVIS BODY & TRAILER, INC.

8. CONSEQUENTIAL DAMAGES: Notwithstanding any other provisions of this agreement, in no event shall Travis Body & Trailer be liable, whether arising under contract, tort (including negligence) or otherwise, for loss of anticipated profits, damage to loads or contents of the equipment, transportation expenses due to repairs, non-operation or increased expenses of operation cost of purchased or replacement equipment, claims of customers, cost of money, loss of user capital or revenue, or for any special, incidental or consequential loss or damage of any nature arising at any time or from any cause whatsoever.

TYPICAL WARRANTY PERIOD BY TRAILER MODEL

At the time of the printing of this manual, the typical warranty period for each trailer model produced by Travis Body & Trailer, Inc. was as follows:

MODEL:	WARRANTY TERM:
Aluminum End Dumps	
Classic, Wave, Vertex – frameless	**5 Years (100,100,50,30,20)**
Classic, Wave, Vertex – frame-type	**5 Years (100,100,50,30,20)**
Classic, Wave, Vertex – quarter-frame	**5 Years (100,100,50,30,20)**
SST – Aerodyne & Classic	**5 Years (100,100,50,30,20)**
Palletizer	**5 Years (100,100,50,30,20)**
Wedge	**5 Years (100,100,50,30,20)**
Power-Lite	**5 Years (100,100,50,30,20)**
Aero-Lite	**1 Year**
Rendering	**1 Year**
Aluminum Dump Bodies	**5 Years (100,100,50,30,20)**
Transfer Trailers	
Tippers	**1 Year**
Live Floor	**1 Year**
Steel Trailers	
Hard Rock	**1 Year**
LSTII	**1 Year**
All Other Steel	**1 Year**
Aluminum Bottom Dump	**1 Year**
Tote Dumper	**1 Year**

WARRANTY CLAIM PROCEDURE

In the event a warranty is requested for any Travis Body & Trailer, Inc. product, the following procedures are recommended:

1. Record the following information:

    a. Serial number of trailer or body;
    b. Serial number and model number of component, if applicable, such as axles, hydraulic cylinder, floor system or suspension;
    c. Description of problem;
    d. Date when problem was discovered.

2. Contact Travis Body & Trailer Warranty Department:

    a. Furnish information from step 1 to warranty department verbally, and also in writing;
    b. Give an estimate on labor and parts to be used in writing. Assuming it is a covered repair, you will receive a purchase order number authorizing repairs.

Warranty claims may be handled by telephone. Travis Body & Trailer Inc. must authorize repairs and a cost determined and approved before any repairs are preformed. For warranty authorization, contact Travis Body & Trailer, Inc., Warranty Department at 800 535-4372 or fax 713 466-3238.

STATEMENT ON TRAILER LINERS

The trailer industry now widely uses plastic floor liners. There exists a wide variety of types of plastic used, thicknesses, suggested installation procedures, suggested applications and recommended maintenance procedures. While Travis will assist in selecting a liner, and will install it according to its manufactures suggested procedures, we will not warrant the product or its installation.

TRAVIS WILL NOT WARRANT ANY LINER, OR INSTALLATION OF THE LINER. IF THERE IS ANY WARRANTY TO BE EXTENDED BY THE MANUFACTURER, YOU MUST CONTACT THEM DIRECTLY.

INSPECTIONS

The operator of this equipment is responsible for inspecting the equipment at regular intervals. Due to extreme forces that are applied to the trailers, particular emphasis should be placed on visually checking for small cracks, damage or for the proper working condition of all safety equipment. When a problem goes undiscovered and is not repaired for any length of time it can generally get much worse. The resulting repair cost and safety hazard will be greatly increased and can result in consequential damage to other components. Travis reserves the right to deny warranty for circumstances where the extent of the needed repair resulted from a failure to inspect and properly treat problems before they become more extensive and/ or dangerous.

IV. IDENTIFICATION (Serial Number Locations).

The official Vehicle Identification Number (Serial Number) used for title, registration, and identification purposes is stamped on a serial plate which is located on the right front of your trailer. This plate also contains information on your trailer model, date of manufacture, Gross Vehicle Weight Ratings (GVWR) and Gross Axle Weight Ratings (GAWR). The number is also stamped underneath the trailer both on the sub-frame at the rear and on one of the cross braces near the front of the trailer and underneath the serial plate itself.

If for any reason you should find it necessary to correspond with Travis Body & Trailer, Inc. about your trailer, please include the serial number as shown on the serial plate.

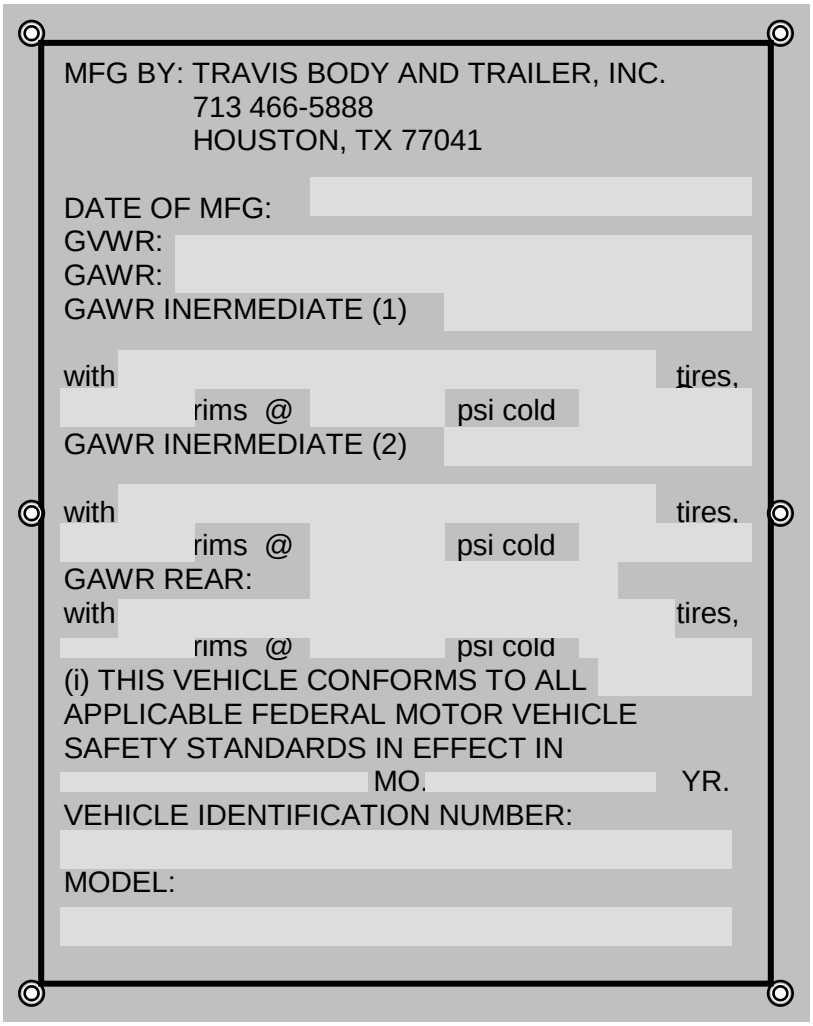

V. CRITICAL INFORMATION RELATING TO END DUMP TRAILERS

GENERAL COMMENTS

Today's ever increasing need for operational efficiency has greatly affected the construction, use, and operation of dump trailers. The increased body length of dump trailers due to federal bridge laws and the economic pressure of deregulated competition has made dumping operations more complex and, therefore, requires highly skilled operators. The long, narrow bodies can be a safety hazard for both operator and equipment if not properly operated. To ensure safe, efficient, and prolonged operation of your new trailer, the following precautions must be observed:

These precautions apply for all types and models of end dump trailers, steel, aluminum, frameless, frame-type and quarter-frame.

DUMP TRAILER OPERATING PROCEDURES

THE OPERATOR SHOULD MAKE A PREDUMPING INSPECTION OF THE TRAILER AND DUMPING CONDITIONS PRIOR TO DUMPING. HE MUST MAINTAIN AT ALL TIMES POSITIVE KNOWLEDGE THAT NO PERSONNEL ARE STANDING OR ARE WITHIN RANGE OF THE TRAILER SHOULD A TIP OVER OCCUR.

1. Ensure that the operator is thoroughly familiar with the equipment, its operation, and the dump site.
2. Do not load in excess of the Gross Vehicle Weight Rating shown on the vehicle serial plate.
3. The load must be evenly distributed in the bed of the trailer during loading and dumping.
4. Do not attempt to dump the load in high wind conditions.
5. Tractor and trailer must be in a straight line on firm level ground with sufficient overhead clearance. Apply the brakes securely before using the hoist (Use trailer brakes for frameless and quarter frame, all brakes for frame-type). Avoid low spots or depressions. The rear trailer wheels must contact the ground before dumping.
6. Make sure the tailgate is in the OPEN (unlatched) position when dumping.
7. For side opening gates, make certain that the open barn door is secured to side of trailer before dumping.
8. Wet, sticky or frozen loads may hang up in the front of the trailer and cause a tip over. Take extra precaution when dumping these types of loads.
9. Stay at the controls in the cab while dumping and lower the body immediately if the body leans or shifts to one side while dumping. Do not continue the dumping operation.
10. Do not move the trailer unless the body is completely lowered.
11. Do not "jerk" the body to free a sticky load as severe and expensive damage to the hydraulic system, cylinder, trailer or possible catastrophic failure to the hydraulic cylinder can occur.
12. Failure to observe these precautions could result in a tip over or damage.
13. Prior to raising the body, verify the body will not contact power lines or other obstructions when in the raised position.
14. For air ride trailers, make certain that the air bags are deflated.
15. Do not attempt, under any conditions, to work on or service the trailer or dump body in a raised position unless the body or trailer is properly braced and propped so that under no circumstances can it fall.
16. Do not park the trailer in a raised position.
17. Never stand in back of the trailer when dumping.

Should the body lean or shift while in an elevated position, it must be lowered as quickly as possible. The operator must then check the following items before attempting any further dumping:

1. Inspect tires for flats and/or low air pressure.
2. Inspect springs for weak or broken spring leaves.
3. Check terrain. Wheels may be sinking in unevenly.
4. Inspect the load. It may be sticking or be loaded to one side of the body and not dumping evenly.
5. Check wind velocity and direction. High or gusty wind conditions can cause the trailer to sway or tip over.

Any one or a combination of the above conditions could cause serious accident and/or damage to the dump trailer if not promptly and properly corrected.

The manufacturers of trailers, bodies, hydraulic cylinders and related equipment cannot be responsible for the operation of the products. This responsibility rests with the operator. Travis Trailers, Inc. therefore, cannot guarantee a trailer against tip over.

DUMP TRAILER CONFIGURATIONS

Your Travis Body & Trailer, Inc. Dump Trailer has been designed for the rough work it is called upon to perform day after day. The key to how well and how long it will perform depends upon the manner in which it is operated and serviced.

FRAME-TYPE: The frame type models, aluminum or steel, consist of a dump body mounted on a semitrailer chassis. The semitrailer frame provides support for the suspension, axles and landing gear. It connects the trailer to the tractor fifth wheel. The front mounted hoist affords greater lifting leverage and steeper dumping angles, while reducing load strain on the hoist. This hoist construction provides the utmost in simplified operations.

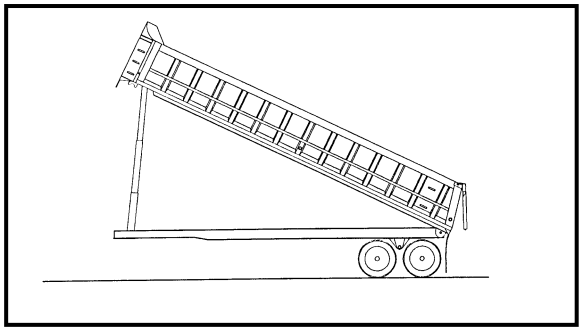

Frametype End Dump

FRAMELESS & QUARTER-FRAME: The frameless and quarter frame type models, aluminum or steel, consist of a dump body with a landing gear assembly attached to the draft arms. It is distinguished from a frame-type dump trailer by the lack of a full length frame which supports the landing gear, and connects the trailer to the fifth wheel. A fifth wheel plate and draft arms are used to replace the full frame. The draft arms are hinged on both ends and connect the fifth wheel plate to the body at approximately the midpoint of the body. The draft arms help control the dumping action which is accomplished by a front mounted telescopic hoist. For frameless models, rotation of the dump body occurs about the trunion of the tandem suspension and/or the rear most axle. For Quarter Frame Designs, the trailer body rotates about a rear hinge while the drag link keeps the rear sub-frame approximately level during the dump cycle.

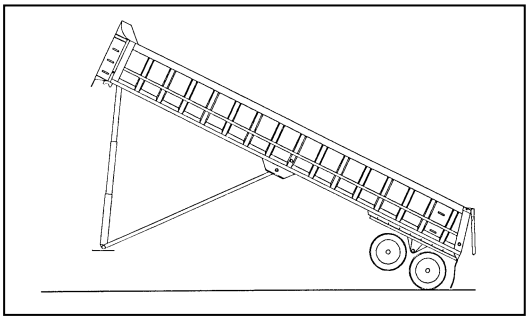

Frameless End Dump

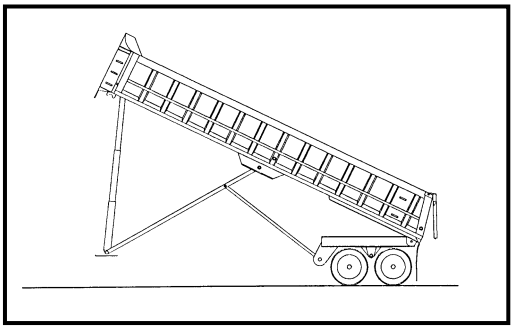

Quarter-frame End Dump

VI. OPERATION OF BOTTOM DUMP TRAILERS (see also section XVIII)

A bottom dump trailer is considered to be a very safe operating unit as it can be used for hauling sand, gravel, rock, dirt or other aggregate type materials but does not need to be raised into the air to discharge the materials. The same general precautions, however, should be utilized when operating a bottom dump as for other types of trailers. See section VI and VII for a review of these general precautions.

Before attempting to load the bottom dump trailer, the operator should assure that the gates are properly working. He should move the gates through a complete cycle by using the toggle switch on the trailer or in the cab. Operating the toggle switch is key activated at either location. After closing the gates, the trailer can then be loaded. The trailer can be unloaded in a few different basic ways.

The first way is to drive over an opening for underground storage or over a grizzly. Once the operator has centered the gates over the opening, he simply activates the gates to their complete open position allowing the payload to empty out of the trailer. Once unloaded, he can close the gates then pull forward.

To windrow the material involves opening the gates to a predetermined amount then driving forward slowly while the materials unloads. The gates are limited as to the amount that they are allowed to open by the use of chains. It is important that both ends of the gate are limited by the same amount in order to prevent damage to the gate or its hinge components. This method is commonly used for spreading road base material over a 50 to 100 foot length. In this case the gates may be limited to a 12 to 24" opening. By experience, the operator can determine what opening size and speed combination will result in the spread length desired. These factors will be different depending upon the exact material being used.

Specific precautions apply to the operation of the bottom dump trailer.

LIMITING CHAINS MUST BE THE SAME LENGTH ON BOTH FRONT AND REAR DOORS. DO NOT CHAIN THE DOORS UNEQUALLY AS PERMANENT DAMAGE COULD RESULT.

TO ASSURE DIMENSIONAL AND STRENGTH CONFORMANCE USE ONLY ORIGINAL TRAVIS LIMITING CHAINS.

ENSURE THAT CHAINS ARE NOT WORN OR DAMAGED.

ENSURE THAT CHAIN ENDS ARE HANGING ON THE OUTSIDE OF THE DOORS.

ENSURE THAT EXCESS CHAIN DOES NOT HANG DOWN AND GET CAUGHT BETWEEN DOORS.

ENSURE THAT CHAIN LOCKING TABS ARE IN PLACE TO PREVENT CHAINS FROM DISLODGING

DO NOT OVERLOAD THE TRAILER

DO NOT STAND NEAR OR MOVE THROUGH THE AREA AROUND THE DOORS DURING THE DUMPING OPERATION

THE OPERATOR MUST REMAIN AT THE CONTROLS DURING THE DUMPING OPERATION

DO NOT PERFORM ANY MAINTENANCE ON THE TRAILER WITHOUT FIRST EXHAUSTING ALL AIR FROM THE RESERVOIRS. THE DOORS THEN MUST BE SECURED BEFORE ENTERING THE CHUTE AREA.

DO NOT DROP A LOADED TRAILER ON THE LANDING LEGS

ENSURE THAT THE AIR SYSTEM OILER AND DRYER ARE FUNCTIONING PROPERLY

DO NOT CLIMB ON THE TRAILER DURING LOADING OR UNLOADING

Your bottom dump trailer is equipped with an air oiler and dryer. Both should be maintained and adjusted in accordance to the specifications set by the original equipment supplier. Installation and maintenance instructions will be provided along with this manual for easy reference.

VII. OPERATIONS AND INFORMATION RELATING TO ALL TRAILERS

LIGHTS AND WIRING

Travis's trailers are equipped with a seven-way electrical receptacle located on the front of the trailer. The electrical system is 12 volts.

To conform to FMVSS108 (Federal Motor Vehicle Safety Standards), the lights on your trailer consist of front clearance lamps, side marker lamps, three rear identification lamps and a license plate lamp, combination stop and tail lamps, and combination rear marker and turn signal lamps. Reflective tape is mounted on each side and the rear of the trailer.

TWO-SPEED VERTICAL SUPPORTS

Two-speed supports with are standard equipment on frame type dump trailers, tippers and live floor trailers. They can be included on frameless and quarter frame designs as optional equipment. The supports are raised or lowered manually with a crank and must be in a fully retracted position during travel. When the trailer is parked, they are lowered to the ground to provide support for the front of the trailer. The position of the operating crank will determine the speed with which the supports are raised or lowered.

SUSPENSIONS

A. SPRING SUSPENSIONS:

Hutch 900

The Hutch-900 (50,000 lb. rated) is a trunion mounted, tandem spring suspension. The axles are secured by twin U-bolts under each end of the three main spring leaves. The suspension is ideal for dump trailers and off the road operation where unusual articulation is required.

Watson SWLW44T1

The Watson SWLW44T1 (44,00 rated capacity) is a trunion mounted, tandem spring suspension with a T1 straddle or hangar plate. Axles can be mounted in an over-slung or under-slung fashion depending upon desired ride height.

Reyco 21B and Hutch 9700

These are 4-spring models typically used for frame type and non-dumping trailers such as tippers or bottom dumps.

B. Air Ride Suspensions:

HT 300 series, Intraax and Ridewell 240

These are typical tandem air ride suspensions used for all trailer configurations. Capacities are 50,000 lb. per tandem set.

NOTE: OPERATOR MUST NOT DUMP THE TRAILER WITH THE AIR BAGS INFLATED. INSTABILITY AND A POSSIBLE TIP OVER WILL OCCUR. AN OPTION FOR SEMI-AUTOMATIC EXHAUSTING OF THE AIR BAGS IS AVAILABLE.

Liftable Axles

Configurations include liftable front axles (tandems), third axles and fourth axles. Suspension models include the Watson 1368 (capacity 13,200 lb.), the Watson 9000 (capacity 12,000 lob.), the Watson 1650 (capacity

16,000 lb.) and the use of a center lift kit for standard tandem air ride suspensions. These axles save on necessary tire wear when running empty and, with respect to third or fourth axles, allow for increased legal loading of the trailer while not increasing trailer length. The key to safe operation of these axles, whether they are third axles, fourth axles or the center lift type for tandems, is that**:**

THE AXLES MUST BE IN THE DOWN POSITION AND INFLATED WHENEVER THE TRAILER IS LOADED. TRIGGERING A DEPRESSURIZATION OF THE AIR BAGS WHEN LOADED, EVEN IF ONLY FOR A SHORT PERIOD OF TIME SUCH AS CORNERING, CAN CAUSE DAMAGE TO THE OTHER AXLES AND SUSPENSION COMPONENTS. THIS VOIDS WARRANTIES AND IN MOST CASES VIOLATES FEDERAL OR STATE BRIDGE LAWS.

BRAKE SYSTEM

The brakes on your trailer are actuated by the tractor air system. Hoses and glad-hands make a flexible air line connection between the tractor and trailer. The service and emergency air line glad-hands are located on the front of the trailer. The controls for the system are located in the tractor. The service brakes are normally activated by a sequence of manual and automatic operations. When the tractor brake pedal is depressed, an air pressure signal is transmitted through the trailer service line to the emergency relay valve. The emergency relay valve then operates automatically to route reservoir air through the service brake air supply lines to all air chambers to apply the brakes. When the tractor brake is released, the pressure signal ceases and the emergency relay valve vents air pressure and releases the brakes. The trailer brakes will apply automatically if the trailer accidentally breaks away from the towing vehicle or air lines are disconnected.

TRAILER HYDRAULIC SYSTEM

The standard dump trailer is equipped with a 1-inch hydraulic fitting and a telescopic front mounted hydraulic cylinder. Maximum operating pressure is 2,000 psi.

At no time should the cylinder be considered a structural member. It has one function: to raise or lower the dump body and can withstand axial loads only.

JERKING THE TRAILER WHILE DUMPING CAUSES SIDE LOADS TO BE EXPERIENCED BY THE CYLINDER AND CAN CAUSE A RUPTURE OR COMPLETE FAILURE.

The trailer hydraulic system is connected to the tractor by a self-sealing coupling located on the front of the trailer. Connection or disconnection of the trailer from the tractor may be done while the hydraulic system is under pressure with virtually no loss of fluid or entry of air into the fluid system .

Excess air that builds up or gets trapped inside the hydraulic cylinder can be bled off using the bleeder valve on the cylinder itself. For instructions on bleeding the cylinder turn to page 35.

TAILGATE LOCK SYSTEM (AIR OPERATED)

Your trailer is equipped with a tailgate locking system. The system provides positive tailgate locking. Most end dump trailers and some transfer trailers utilize an air actuated locking system. The standard set up is to place the air control on the roadside rear of the trailer. Pull the control knob and air pressure is applied to the latch hooks to open them. High sided trailers have more than one row of latches. Pressure is kept against the hooks to keep the tailgate "unlocked" during the entire "unlock" cycle. Push the control knob and air pressure is applied to secure the hooks. This pressure is also kept against the latch hooks until the operator elects to unlock the system. The tailgate locking system locks "over center" when closed. This aids in keeping the tailgate closed should air pressure be lost. The tailgate lock should be released before the dump (lift) cycle is started so that the load will start to discharge immediately as the body is elevated. The push/pull air control is normally located on the side of the trailer.

NEVER, EVER PLACE HANDS OR FINGERS BETWEEN THE LATCH HOOK AND LATCH ROD. ANY SUDDEN PRESSURIZED LOCKING OF THE LATCH IS CAPABLE OF SEVERE BODILY INJURY. BE EXTREMELY AWARE OF ALL OTHERS AROUND THE REAR AREA OF THE TRAILER WHEN ACTIVATING OR DEACTIVATING THE TAILGATE LATCH.

TAILGATE LOCK SYSTEM FOR TRANSFER TRAILERS (MANUAL OPERATION)

Transfer trailers with side swinging tailgates are now equipped with a manual tailgate locking system. It is generally mounted on the roadside of the trailer. When fully engaged the system will lock over center. This is accomplished by rotating the latch hook rod by using the long latch rod handle. The operator must be certain that the 3 rotating latch plates are turned into position so that each of the latch hooks fully engage each latch plate.

When pushing the latch rod handle in the closed position, care must be taken to not hold the handle at a location that would allow the operators hand or fingers to contact the side brace of the trailer or the latch handle cradle bracket.

This is important as the final few inches of travel for the latch handle (when the system locks over center) may require considerable force. When the latch does finally lock over center, the handle will be suddenly pulled toward the side-wall of the trailer. To keep hands and fingers clear it is suggested that the operator hold the latch handle near its end. This will also reduce the force that must be applied to the handle.

Finally, the latch handle must be placed into the latch handle cradle bracket while traveling. It is important to always use the safety latches on the rear gate as a secondary fail-safe for the manual locking system.

CAUTION WHEN UNLATCHING !: When opening the latch rod handle, care must be taken to hold the handle with arms extended and away from head or body so that in the event of a sudden opening of the gate, due to a shifted payload, the handle will not strike the operator resulting in possible serious injury.

LATCH HOOKS

Latch hooks and linkage arms are easily accessible and can be adjusted individually for precise tension. All linkage is welded to a shaft for easy servicing. Grease fittings are placed on shaft bearing blocks under the trailer for lubrication.

HYDRAULIC FLIP TARP SYSTEM

Certain trailers may be equipped with a hydraulically powered flip tarp system. These are commonly applied to tipper and/ or walking floor trailers for the waste hauling industry. Operators should be cautioned that this system is being powered under high pressure and that a person that gets trapped, caught , hit or pinched by the moving parts of this system is likely to be injured. The tarp will require considerable side and overhead space as it is activated.

The operator must be certain of an all clear condition (at least 12 ft. above and to both sides of the trailer) prior to opening or closing the tarp.

PINTLE HOOKS OR COUPLERS

Pintle hooks or couplers are commonly installed on bottom dumps as well as other types of trailers. A wide variety of hooks are used for each particular application. A separate operating manual will be provided for the particular hook provided with your trailer. Operators should become familiar with all aspects of the safe operation of their particular coupler. Primary to these considerations must be to never overload the rated capacity of the hook coupler that has is being used.

REAR UNDER-RIDE

Federal laws prohibit the extension of the trailer body (such as aprons) by more than 12 inches beyond the back edge of the rear most tire. For some trailer models, Travis has developed a rear under-ride bumper that allows for such extensions. The operator must assure that such under-ride protection is in place and secure prior to operating on the road. In other cases, Travis has developed a folding apron that must be folded down in the un-extended position prior to operating on the road. Proper maintenance of the under-ride bumper must be attended to by the operator to assure that it remains in its original design and working condition. Operators are advised to not add extensions to the rear of the trailer as they may be in violation of Federal law.

VIII. GENERAL GUIDELINES FOR OPERATING TRUCK AND TRAILER

It is not within the scope of this manual to provide a complete operating guide for both tractor and trailer. It is anticipated that operators of all trailer equipment are experienced in the functions of the tractor and are versed in the required safety measures. The following represents a review of selected aspects or procedures and IS NOT AN EXHAUSTIVE LIST.

COUPLING THE SEMITRAILER AND TRACTOR

Open The Fifth Wheel Lock (Jaw Type).

IMPORTANT NOTE: Frameless and quarterframe end dump trailers have an oscillating coupler plate (tilts from front to back) and require the use of a fixed position, non-oscillating tractor fifth wheel .

CAUTION: DO NOT ATTEMPT TO PULL A FRAMELESS OR QUARTERFRAME END DUMP TRAILER WITH AN OSCILLATING FIFTH WHEEL. DAMAGE TO TUCK AND TRAILER WILL RESULT.

Transfer trailers and frame-type end dump trailers are the opposite (like most standard semi-trailers) where the trick fifth wheel will oscillate and the trailer coupler plate is fixed.

Before attempting to couple the tractor and semi-trailer, verify that the coupler jaws are open (damage may result if an attempt is made to couple with the jaws shut). This is usually accomplished by squeezing the handles together and moving the release handle forward (other models exist). In the open position, the plunger stem will extend out of the front face of the fifth wheel. The fifth wheel is now in the unlocked or cocked position and ready for coupling. For trailers with fixed position coupler plates (such as transfer trailers), verify that the oscillating tractor fifth wheel is in the normal resting position (tilted down at the rear, that all mountings are secure and that the fifth wheel will clear leading edge of the trailer coupler plate. For end dump trailers with oscillating coupler plates, verify that the trailer coupler plate is positioned so that the fixed truck fifth wheel plate will clear the front edge of the trailer coupler plate (normally the trailer coupler plate should be tilted down at the rear). Be certain that all mountings are secure.

Open Fifth Wheel Lock (Hook Type)

Before attempting to couple tractor and semi-trailer, verify that the hook on the fifth wheel of the tractor is open. This is accomplished by pulling out the hook lock handle. This will permit the hook to automatically move toward the curbside of the tractor, causing the fifth wheel to become unlocked or cocked for coupling. Verify that the fifth wheel is in a normal resting position (tilted down at the rear) and that all mountings are secure.

Block Semi-trailer Rear Wheels

If a parking brake is not provided, block the trailer by placing chocks firmly against the rear of the tires.

Note: Conditions may be such that no chock blocks are available, or no parking brake is provided to hold the semi-trailer when coupling. If such is the case, the brake lines may be connected to the semi-trailer prior to the actual coupling, and the trailer brakes applied. This will hold the trailer while the coupling is completed. Caution must be used to make sure the brake hoses do not become entangled when backing under trailer.

Align Tractor with Semi-trailer

Before coupling the two units, verify the semi-trailer supports are set at the proper coupling height. This will ensure that the fifth wheel will actually raise the semi-trailer. If the semi-trailer is too high, the bottom flange of the kingpin will pass on the top of the jaws. If the unit is too low, tremendous forces are placed on all components and significant damage will be done to the trailer landing gear, draft arms and other components, because the driver has to engage the trailer with an unnecessarily large force to slip the tractor under the semi-trailer.

Align the tractor so the kingpin of the semi-trailer is centered on the "V" of the fifth wheel. Always be sure to "pick up the trailer slightly" with the fifth wheel. A trailer that is too high enters the fifth wheel improperly, which would result in damage or a hazardous operating condition.

Backing Under Semi-trailer

Slowly back the tractor under the semi-trailer until the fifth wheel locks firmly to the kingpin. On the jaw type coupler, the stem of the plunger must be flush with the outer rim of the coupler to be fully hooked. This must be verified before attempting to move the tractor forward or backward. A visual check must be made to ensure proper coupling.

DO NOT TAKE FOR GRANTED THAT THE TRACTOR AND TRAILER ARE PROPERLY ENGAGED, CHECK AND VERIFY.

Couple Brake and Light Lines

Connect the emergency airline from the tractor to the emergency (RED) glad-hand on the roadside of the trailer. Connect the service airline on the tractor to service (BLUE) glad-hand on the curbside of the trailer. Connect the light jumper cable from the rear of the tractor to the receptacle on the trailer. The couplings are located on the front of the semi-trailer and are plainly marked. These flexible connections between the two units permit the air and electrical power to flow from the tractor to semi-trailer to operate the brake and electrical systems.

Hydraulic Connections – Dump trailers and Live Floor Trailers

Connect the hydraulic hose from the tractor to the trailer hydraulic hose on the front of the semi-trailer and connect it to the coupling on the tractor. Verify the quick disconnect couplings are tight. Check for leakage after the hoist or floor system has been operated.

DUMP TRAILERS – Dump trailers will utilize one hydraulic interconnect as the hydraulic fluid will pass both into and out of this same line.

LIVE FLOOR TRAILERS – Live floor trailers have two hydraulic connections. These are marked as “return” and “pressure” on the front of the trailer. The pressure connector should be attached to the hose coming from the tractor pump while the return is connected to the hydraulic fluid reservoir.

Retract Stiff Leg Supports

With the tractor coupled to the trailer, remove the cotter pins and both locking pins. The supports are raised manually. Position the legs in a fully retracted position and install the locking and cotter pins.

Raise Two Speed Supports

Pull the crank out to the low gear position and raise the support until the weight is off of the supports. Then, push the crank into the high gear position, and finish raising supports. Position and secure the crank handle in the clip on the trailer leg. Verify the crank handle shaft remains in the high position. This action will eliminate the possibility of the support legs accidentally lowering. Always maintain a positive hold on the crank handle until it is secured in the clip.

NOTE: A partially retracted support can cause considerable damage when operating over uneven ground clearance.

Final Check

Push the emergency valve into the open position. This will charge the semitrailer brake system and render the brakes operative. Check and observe the operation of the trailer brakes by applying trailer brakes and rocking the tractor forward and backward. Verify that the fifth wheel is fully engaged and locked. Check the operation of the trailer lights by turning on the tractor light switches. Verify that the hydraulic system is connected.

UNCOUPLING SEMI-TRAILER FROM TRACTOR

Block Semi-trailer Rear Wheels

If the trailer is not equipped with a Parking Brake System, block the trailer by placing chock blocks against the front of the tires.

Lower Stiff Leg Supports

Remove the cotter pins and pull the support locking pins. This will allow the support to drop freely as the locking pins are removed. Check alignment of legs so that both are extended by the same amount and install locking

and cotter pins. Drop legs should be lowered as close as possible to the ground to reduce shock and possible damage to the legs. Blocks may be inserted under the legs (if well secured) to take up any gap that may exist.

For air-ride equipped trucks, you may exhaust the air from the truck air bags to gently lower the trailer the last inch or two.

CAUTION: NEVER UNCOUPLE A LOADED TRAILER ONTO NON-LOADBEARING DROP LEGS.

CAUTION: Keep clear of the supports when the trailer is being uncoupled.

Lower Supports (Two Speed)

Remove the support crank from the retaining clip and push the crank in to obtain the high gear position. Lower the supports to the ground (Fig.11). Pull the crank out to the low gear position, and give the crank a few extra turns. This will lessen the weight on the fifth wheel and help prevent shifting of the load in the trailer when the tractor is uncoupled. Always maintain a firm hold onto support crank until handle is secured in the retaining clip.

NOTE: Place support wheels or sandshoes on a plank or smooth surface to prevent the trailer supports from sinking into soil or soft asphalt when loaded trailers are uncoupled from the tractor.

Disconnect Light Cable and Brake Lines

Disconnect the light jumper cable. Push the emergency valve into the closed position. This will discharge the semi-trailer brake system and render the brakes inoperative. Disconnect both brake hoses at the trailer glad-hands. Attach the brake lines to dummy couplings at rear of cab to prevent road dirt and other foreign matter from entering the tractor brake system.

Disconnect Hydraulic Lines

Disconnect the single hydraulic hose from the dump trailer. On the live floor trailer, disconnect both hydraulic hoses.

Unlock Fifth Wheel

The fifth wheel is uncoupled by moving the locking handle forward, making a full stroke.

CAUTION: Make a final inspection to be certain the chock blocks are set firmly against the tires and the supports are completely down. Pull the tractor ahead slowly until the two units are separated. This will permit the supports to assume the weight with as little shock as possible.

COUPLING SAFETY TIPS

NEVER Assume coupling is locked or unlocked. CHECK!!!

NEVER Use force to couple or uncouple. Damage may occur to the supports, fifth wheel, kingpin or front of the semi-trailer.

NEVER Force supports up beyond their normal retracted position.

NEVER Disconnect when the supports will land on a soft or uneven surface.

NEVER Attempt to couple a heavily loaded trailer unless the fifth wheel and semi-trailer pickup plate are on the same plane.

NEVER Attempt to couple or uncouple the semi-trailer unless the Fifth wheel is in a normal resting position (tilted down at rear).

NEVER Attempt to couple or uncouple the semi-trailer unless the support crank is engaged and secured in the clip.

NEVER Attempt to uncouple a loaded frameless dump trailer on the stiff legs.

STIFF LEGS ARE FOR USE ONLY WHEN THE TRAILER IS "EMPTY".

ALWAYS Position the fifth wheel to kingpin before coupling. Ensure straightway alignment between tractor and semi-trailer.

ALWAYS Lower supports to the ground before disconnecting tractor from the semi-trailer and raise them fully before moving the semi-trailer.

ALWAYS Use chock blocks or lock semi-trailer brakes when coupling or uncoupling the tractor and semi-trailer.

ALWAYS Be certain the guide forks on the fifth wheel are in the DOWN position.

ALWAYS After coupling, make a visual check to ensure that the fifth wheel locking device is in the locked position. Apply pressure to the locking device by applying the semi-trailer brakes and attempting to move the tractor forward.

SUGGESTED PRE-TRIP INSPECTION:
Truck and Trailer

The following pre-trip inspection checklist is provided only as a guide to owners and operators of Travis Body & Trailer, Inc. Other check points may be appropriate on your particular equipment. Safety checks of the complete unit should be made before the start of every trip and at regular intervals.

The pre-trip inspection should include the items listed, plus any additional inspections required because of unusual operating conditions. Be sure to make the inspection in a safe place where you will not obstruct other traffic.

APPROACHING THE VEHICLE

Look for oil, water, or fuel leaks. Open the hood, and check the oil and coolant levels. Check the condition of all drive belts, wiring, hoses, and tubing for leaks, chafing, kinks, and wear. Close the hood and check the general condition of the front of the tractor.

INSIDE THE CAB

1. Parking brake on, start engine.
2. Check the oil pressure, ammeter, tachometer, speedometer, warning lights, and air pressure. Deplete pressure until warning buzzer sounds.
3. Sound the horn and test for an excess amount of steering wheel play.
4. Test washers, wipers and inspect the condition of the windshield, rear, and side glass.
5. Verify that the mirrors on both sides of the cab are clean and aligned. Wipe the mirrors with a clean soft cloth.
6. Test the heater and defroster.
7. Check for a charged fire extinguisher and emergency equipment.
8. Check for damaged or missing seat belts.
9. Turn on all lights and flashers, (low beam headlamps) and apply emergency brakes. Listen for leaks.

10. Check and operate the hydraulic, power takeoff, and pump controls. On dump trailers, raise the body one stage of the hoist cylinder, then lower. Always disengage the power takeoff when the hoist is not in use. Place hoist controls in the HOLD position.

11. Where applicable, operate the tailgate control valve. Verify that it is operating properly.

LEAVE CAB (ENGINE RUNNING) AND WALK TOWARD REAR (ROADSIDE)

1. Verify that the fuel tank is tightly secured, and that there are no visible leaks.

2. Drain the tractor air tank.

3. Examine the left rear tractor wheels and tires for loose lug nuts, tire cuts, wear, and inflation. Thump tires.

4. Check if electrical connector is firmly seated and free from chafing.

5. Check the air and hydraulic hoses for free from chafing, air leaks and are properly supported.

6. Verify that the fifth wheel is locked and the mounting is secure.

7. Check the hydraulic reservoir and pump for leakage. Verify that the reservoir oil is at the proper level.

8. Check that the trailer supports are raised and secured.

9. Check the tailgate control knob. Verify that the valve is in the closed position.

10. Drain the semi-trailer air tanks, and listen for air leaks.

11. Check the condition of all air chambers, air hoses, springs, air springs and slack adjusters.

12. On semi-trailers equipped with oil lubricated wheel bearings, wipe the hub and check the oil level.

13. Check wheel studs and nuts. Verify that they are in position and tight.

14. Thump the tires. Remove all objects lodged between the treads, carcasses, and the duals.

15. Check and inflate tires to the recommended pressure, and inspect for safe operation.

16. Where applicable, check the spare tire. Verify that it is secure within the carrier. Also check the tire carrier's bracketing for proper mounting. Further, assure that the safety chain is secure and in place.

17. Inspect the splash guards for proper attachment, breaks and cracks.

18. Inspect all ropes, tarps, straps, tie-downs, tailgate and miscellaneous secured equipment. These should be checked for serviceable conditions. Be certain they are secured to prevent being blown about by the wind.

19. On a combination trailer, check the hitch, pintle hook, safety chain, air and hydraulic lines, and electrical connections.

20. Inspect all lights and reflectors. They should be burning properly, clean and undamaged. Replace all damaged reflectors, lenses, and burned out bulbs.

RIGHT SIDE OF VEHICLE (CURB SIDE)

1. Check the curbside of vehicle in same manner as roadside.

FRONT OF TRACTOR

1. Inspect front tires and wheels.

2. Inspect headlamps, clearance lamps, identification lamps, flashers and turn signals.

BACK IN CAB

1. Depress the dimmer switch. Observe the high beam light. Turn lights off.

2. With the trailer brakes still on, release the tractor brakes and (in first gear) gently test the tractor and trailer coupling.

3. Apply the foot brake and test for air loss.

4. Fasten seat belt.

Any problems noted during the pre-trip inspection should be corrected as soon as possible.

Various techniques, procedures and precautions must be taken when driving the tractor semi-trailer rig. It is beyond the scope of this manual to provide instructions on proper driving skills. A skilled and trained driver should be aware of the methods used for braking, cornering, road conditions, managing hills, parking, backing up, courtesy, clearance and following all appropriate regulations and laws.

Know Your Limitations ! - Load Center of Gravity

Operators of bulk loaded trailers such as end dumps and transfer trailers must take extra precaution when cornering as the load center of gravity can be high and that loads can be unevenly distributed to one side of the trailer. Excessive speed can result in a roll over accident.

IX. TAILGATE OPERATION – end dump trailers

TAILGATE AIR CONTROL VALVE

The tailgate air control valve is normally located at the center driver's side of the semi-trailer. It is an air operated push-pull type valve connected through the emergency air line and control rods of the tailgate locking hooks. The semi-trailer must have at least 70 pounds of air in the emergency air line in order to release the tailgate locks. If the semi-trailer is disconnected from the tractor, or there is air leakage within the system, the tailgate hooks (if properly adjusted) will stay locked by way of mechanical leverage**.**

TO OPEN TAILGATE

Pull out the control valve button as far as possible to unlock the tailgate hooks**.**

CAUTION: When releasing the tailgate or unloading, always be certain that no one is behind or near the rear of the unit.

TO LOCK TAILGATE

To lock the tailgate, push the control valve button in. Make certain the tailgate is closed and that the latch hooks properly catch the latch rod**.**

NEVER allow anyone near the rear of the trailer when activating the latching mechanism. Check both sides of the trailer. Keep hands and fingers away from latch area.

TAILGATE SAFETY REMINDERS

The operator of the trailer is responsible for ensuring that the trailer is operated and loaded properly. This includes the following safety reminders in the operation of the tailgate.

- When loading, verify that the tailgate is in the closed position.

- When unloading, do not attempt to raise the body until the tailgate is in the open position.

- When hauling on or off the highway, always verify that the tailgate is properly secured.

X. DUMP TRAILER HOIST OPERATION

The telescopic hydraulic hoist used in your dump semi-trailer is operated by controls located inside the cab. Although three types of controls are generally used (lever, wire or air shift), the lever type is the most commonly used for dump operations. Operational procedures are basically the same for all three types of controls. You must know the function of every control to operate your dump trailer safely. Never use a control unless you understand its purpose and how to operate it.

BLEEDING THE AIR – See Lubrication (Section XI.)

POWER TAKEOFF CONTROL (PTO)

The power takeoff (PTO) control engages and disengages the hydraulic pump. This control must be engaged with the truck trailer engine running in order to operate the hydraulic system.

HOIST CONTROL

The hoist control has three positions - RAISE, HOLD and LOWER. Generally, RAISE and LOWER are at the ends of the hoist control shift pattern with HOLD in the center position.

TO OPERATE HOIST

RELEASE Release the tailgate locking hooks and manual safety latches.

ENGAGE Engage the power takeoff. The PTO must be engaged to supply power to operate the hydraulic hoist pump.

STANDARD TRANSMISSION:

1. Start tractor engine.

2. Depress clutch and shift into any forward gear. This will stop transmission gears from turning.

3. Shift power takeoff control to ENGAGE position.

4. Shift transmission control to NEUTRAL position.

5. Apply tractor brakes.

6. Release clutch. This will result in rotation of the drive shaft and hydraulic pump.

AUTOMATIC TRANSMISSIONS:

1. With the transmission in NEUTRAL, start the truck tractor engine.

2. APPLY TRACTOR BRAKES.

3. Shift transmission lever into any one of the drive positions. This will stop transmission gears from turning.

4. Shift PTO control to ENGAGE position.

5. Shift transmission to NEUTRAL. This will start transmission, gears turning, resulting in rotation of the hydraulic pumps and drive shaft.

6. Release the tractor brakes.

WARNING: Always disengage power takeoff when not operating the hydraulic system.

RAISE — With the tailgate locking hooks released and the PTO engaged , move the hoist control to the RAISE position to raise the dump body. The operator should remain at his controls and watch the body. If it should lean to one side, immediately lower the body. It is important to feather the hoist control into the HOLD position when lowering so that shock pressure is not on the cylinder.

NOTE: On frameless dumps only the trailer brakes must be applied and the tractor brakes released.
CAUTION: DO NOT RACE THE ENGINE WHILE OPERATING HOIST.
Best results will be obtained by running engine at 1000 to 1200 maximum rpm.

HOLD — To maintain the hoist at a desired position, move the hoist control to HOLD position and disengage the PTO.

CAUTION: NEVER leave PTO engaged while hoist is in hold position for a long period of time.

LOWER — For normal lowering, move the hoist control to LOWER position. Hoist will stop automatically at the DOWN position. If body is fully or partly loaded, do not move control to full LOWER position, but move control carefully toward LOWER position until body drops slowly. This will eliminate possible damage to the semi-trailer chassis and hoist.

REMINDERS

1. Do not loosen a wet or sticky load by pulling forward or backward and hitting the brakes.

2. Place the hoist control in HOLD position when not in use.

3. Always disengage the PTO when the hoist is not in use.

Should an end dump trailer upset occur, do not attempt to right the unit until the hoist cylinder is retracted and trailer is unloaded. Trying to upright a loaded trailer is likely to cause additional damage to the trailer.

WARNING: STAY CLEAR OF TRACTOR-TRAILER RIG AS THE WRECKER CABLES ARE PULLED. The rig will raise off its side and will fall onto its wheels. It could turn over an additional time.

XI. PROCEDURES FOR TRAILER MAINTENANCE

The Following are important instructions for servicing your Travis trailer. These adjustments and minor repairs may be performed by you. Most of the recommendations apply to all types of trailers, end dump trailers, tippers, slat floor trailers and bottom dump trailers, however some items pertain only to a specific product. Those items are clearly designated as such.

KINGPIN AND UPPER COUPLER

Inspect the kingpin for excessive wear, rough edges, looseness, broken or chipped out areas or cracks. A kingpin showing such conditions must be replaced at once.

Check and inspect the upper coupler mounting plates for a bowed condition. Also check for cracks, breaks and for secure attachment to trailer.

Do not, under any circumstances, weld on the kingpin to compensate for wear. Once a kingpin has been heated by a torch its physical characteristics are changed and its subsequent performance cannot be predicted.

Any welding performed on upper couplers is to be restricted to those areas specified by Travis for attachment and is to be performed in the manner prescribed by Travis.

Remember! For proper and safe operation, a worn kingpin must be replaced.

We suggest all repairs on kingpin and upper coupler be performed only at an authorized Travis branch or dealer.

WHEEL AND RIM CARE

Standard equipment on your Travis semi-trailer is disc wheels. Wheel nuts are inspected and tightened to factory specifications at pre-delivery on a new trailer, or after a wheel has been changed. The wheel nut torque must be checked periodically. During normal highway operation of a new semi-trailer, this check should be made at the first 100, 500 and 1,000 miles. Thereafter, every 5,000 miles. Severe service conditions may require more frequent tightening. Loose wheel nuts may cause shimmy, uneven tire wear, vibration and potentially result in the loss of one or both wheels. Elongated stud holes in the wheels may result from loose hub nuts. Wheel and hub nuts must be torqued to proper specifications to provide maximum service life.

Note that for both pilot mounted disc wheels and ball seat mounted disc wheels, the wheel nut must be retightened at 50 to 100 miles of service as parts may seat naturally causing the torque to drop.

SPOKE WHEEL TORQUE PROCEDURES AND RIM ALIGNMENT

1. Set the semi-trailer brakes if braking power is available. If not available, block one wheel by placing one chock against the front and one chock against the rear of the tire. Verify that the jack is placed on a firm foundation. If the ground is soft or uneven, use a good strong board as a base for the jack.

Note: When lifting the semi-trailer under the axle, be careful to use a jack with heads large enough to distribute the load, or use wood blocks as a cushion between axle and jack.

2. Loosen, but do not remove, the wheel nuts.

3. Raise the semi-trailer until the wheel and tire clear the ground.

4. Recommended procedure for tightening spoke wheels.

   a. Make certain rim clamps are correctly positioned on rim and wheel.

   b. Tighten No. 1 nut (at top of the wheel) until snug.

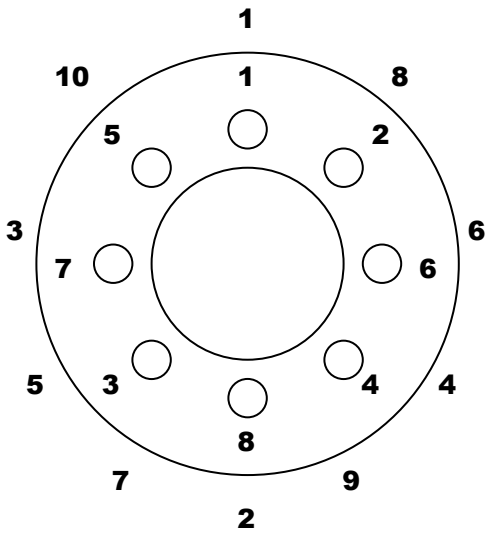

8 lug spoke wheel

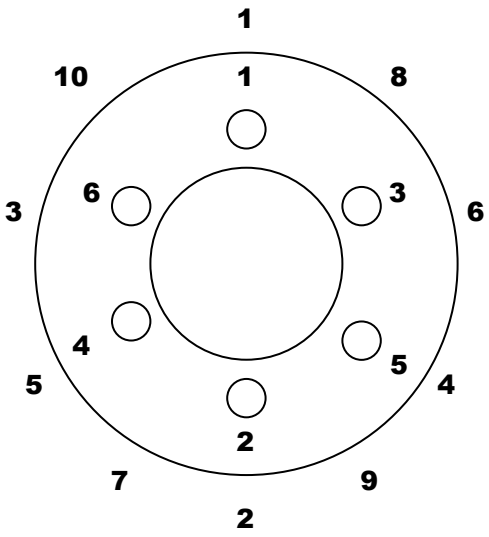

6 lug spoke wheel

   c. Rotate the wheel and rim assembly until No. 2 nut is in the top position. Tighten until snug.

   d. Again rotate the wheel and rim assembly until No.3 nut is in the top position. Tighten until snug. Since the entire weight of the assembly is on the top spoke position, this procedure allows even application of force against three points of the rim for proper alignment.

   e. Repeat criss-cross pattern. Snug each nut by going from No.3 to No.4, and from No.4 to No.5 nut.

   f. Repeat entire criss-cross pattern torquing rim nuts to 175 to 225 foot lbs.

CAUTION: Insufficient mounting torque can cause rim slippage resulting in broken valves, worn parts and damaged tires. Excess mounting torque can cause damage by stripping studs, collapsing spacer bands or forcing rims into an out-of-round condition.

5. Rim alignment procedures are as follows:

a. Place a block of wood or other rectangular object on the surface beside the tire, and rotate the tire and wheel assembly .

Note variations, if any, in the space between the tire and block as the tire is rotated. If this variation should exceed 3/16" for duals, the rim is not properly mounted.

b. To correct misalignment, loosen nuts on side of rim where the greatest deviation occurs, and tighten on the opposite side. Recheck and correct until deviation is eliminated. Lower the semi-trailer to the ground and remove the jack and wheel chocks.

TRAILER SAFETY INDUSTRY COALITION RECOMMENDED PRACTICES:* WHEEL MOUNTING AND APPLICATION FOR TRAILER USE

The following "recommended practices"* have been prepared as guidelines by a technical committee composed of representatives from the National Association of Trailer Manufacturers, (NATM), the Recreation Vehicle Industry Association (RVIA), the National Marine Manufacturers Association (NMMA), the National Truck Equipment Association (NTEA), and a range of steel wheel, aluminum wheel, axle and trailer manufacturers. The Trailer Safety Industry Coalition (TSIC) has tasked this Technical Committee to conduct an investigation into the engineering of the fastening systems for road wheels on trailers and to develop a "recommended practices" document for the assembly of the fastening systems. The Technical Committee provides the guidelines below to communicate these recommended practices for wheel fastening systems. By promoting observation of these practices, the Technical Committee expects to reduce the rate of claims for torque loss on wheel fasteners and the number of wheel separation incidents within the trailer industry.

I. Component Guidelines

1. Surfaces of contact on an aluminum wheel (the nut seat and the mounting surface) must be free of paint, contamination and damage. Smooth, clean surfaces provide the most uniform clamping pressure and best retain torque.
2. Surfaces of contact on a steel wheel (the nut seat and the mounting surface) must be free of excessive paint, contamination and damage. Smooth, clean surfaces provide the most uniform clamping pressure and best retain torque.
3. Surfaces of contact on the axle (the flat hub surface and the threaded studs) must be free of excessive paint, oils, grease, contamination and physical damage.
4. Lug nut geometry must match that of the wheel nut seat. The threads and nut seat must be free of paint, oils, grease and other contamination.
5. Stud length must be sufficient that, after mounting the wheel to the hub, the lug nut is engaged to a depth at least equivalent to the diameter of the stud. For example, a lug nut threaded on a ½ inch diameter stud should thread on for a depth of at least ½ inch.

* These recommended practices represent the state of knowledge when published and may be amended as additional information becomes available.

II. Assembly Guidelines

Assembly of the wheel onto the hub is a critical, safety-related process. The proper method of assembly and the consistency of the torque applied to wheel fasteners are important factors in ensuring reliability of the fastening system and retention of the wheel to the trailer. The trailer manufacturer, distributor/dealer, and end user must consistently follow proper torquing technique in order to ensure the hub and wheel are properly seated and use

caution to prevent anything from interfering with the flat, full designed mating contact of wheel mounting surface and hub. Excess paint, oil, and grease must be removed from the fastener contact surfaces (the mounting surfaces, studs, and lugs) or not applied at all. Adherence to the recommended "do's" and "don'ts" set out below will minimize the likelihood of fastener torque-loss and wheel-separation.

DO'S:

- Obtain confirmation from each component manufacturer that its component/s is/are appropriate for the application, meets the appropriate component guidelines and is/are compatible with the other components in the wheel system
- Develop and distribute a list or manual of proper assembly and torquing procedures consistent with these guidelines and specific technical information provided by component manufacturers
- Train appropriate personnel (factory and field) in proper assembly and torquing procedures
- Insist on consistent, strict adherence to these assembling and torquing procedures
- Conduct and document regular audits or checks to verify compliance with assembly and torquing procedures
- Investigate and correct any obstruction at the center bore of a wheel, resulting from a poor fit between the ornamental cap and the wheel
- Remove all oil and grease from threaded fasteners (studs and lugs)
- Mask or shield (cover) all fastener contact surfaces (mounting surfaces and studs) before painting axles, whether for improved cosmetics or for corrosion protection
- Only use an impact wrench with torque stick as a tool initially to lightly secure the wheel, applying a criss-cross or star pattern (see diagram below)
- Use a calibrated torque wrench to complete the torque fastening process, applying the same criss-cross or star pattern
- Retorque periodically during the trailer's initial towing and thereafter in accordance with the component suppliers' recommendations
- Maintain records of the maintenance and torque checks performed by transporters, noting any loss of torque or any corrective measures taken
- Investigate any customer claim involving wheel loss

DON'TS:

- **DON’T** deviate from the component manufacturers’ recommendations regarding compatible components without a competent engineering review
- **DON’T** substitute any component for the components the suppliers have specified without a competent engineering review
- **DON’T** deviate from the component suppliers’ fastener torque specifications, where provided, without a competent engineering review
- **DON’T** use adhesive products to maintain fastener tension
- **DON’T** use lubricants or oils on threaded fasteners (studs or lugs) to make applying the torque easier unless assembly specifications require it
- **DON’T** apply any additional paint on fastener contact surfaces (mounting surfaces/hub faces or stud

DISC TYPE WHEEL TORQUING PROCEDURES

1. Set the semi-trailer brakes if braking power is available. If not available, block one wheel by placing one chock against the front and one chock against the rear of the tire. Verify that the jack is placed on a firm foundation. If the ground is soft or uneven, use a good strong board as a base for the jack.

Note: When lifting the semi-trailer under axle, be careful to use a jack with heads large enough to distribute the load, or use wood blocks as a cushion between the axle and jack.

2. Loosen, but do not remove, the wheel cap nuts.

3. Raise the semi-trailer until the wheel and tire clear the ground.

4. Using a criss-cross pattern, tighten the inner dual cap nuts to 50 foot lbs. to seat wheels in place. Then repeat, tightening to 450 to 500 ft. lbs.

5. Repeat for all outer nuts. Verify that all studs and cap nut threads are dry and free of oil or lubricant.

6. Lower the trailer to the ground and remove the jack and wheel chocks.

CAUTION: Insufficient mounting torque can cause wheel shimmy, resulting in damage to parts and extreme tire tread wear. Excessive mounting torque can cause studs to break and discs to crack in the stud hole area.

After operating the semi-trailer for a short distance (approximately 50 miles), recheck all nuts for tightness. Parts will usually set naturally and torque on nuts will drop. Retighten all nuts to specified torque. This second tightening will assure a tight, properly aligned wheel assembly.

Note: When inner cap nuts are re-tightened, be sure to first loosen the outer cap nuts several times; then, re-tighten them.

PILOT MOUNTED WHEELS TORQUING PROCEDURE

1. Same as for disc. type wheels but use only one nut per stud.

2. Make sure to seat all nuts in place at 50 ft. lbs. before torquing to a final 450 to 500 ft. lbs.

TIRES AND TIRE CARE

Original Equipment Tires

The tires for your semi-trailer were selected to provide the best combination of reliability, traction, weight-carrying ability, stability, tread life, and riding comfort. To obtain this balance of performance and for your safety, it is essential that you always maintain inflation pressures and stay within the load limits and weight distribution recommendations for your semi-trailer.

Each tire has its size and maximum inflation pressure (psi) molded on the outer side wall of the tire. Increasing pressures (up to maximum permissible pressures) can improve fuel economy but will decrease riding comfort and, possibly tread life.

Over and Under Inflation

Over inflation may result in impact breaks and tread cutting, as both tread and cord body are put under great tension. It also causes a decrease in the road contact area, and the resulting increase in load per square inch usually leads to tread separation. Over inflated tires also transmit excessive action to the beads. Over inflation is an expensive substitute for a tire large enough to carry the load.

Under inflation causes fast and irregular tread wear. It increases flexing, and the heat generated leads to flex and crown breaks in the body of the tire.

Do Not "Bleed" Tires

Letting air out of tires as the heat builds up the air pressure higher than the recommended pressure, is known as "bleeding." This increase in air pressure, however, is a normal condition that is taken into consideration at the time of the tire's construction. The increased pressure will "take care of itself" so that bleeding a tire is unnecessary. Bleeding tires is costly in that it increases flexing, resulting in still higher temperature, faster tread wear and tire failures. When the tire has been bled, the air pressure drops below the recommended pressure after tire temperature returns to normal.

Matching Duals

Use care in matching dual tires. Tires which differ more than 1/4 inch in diameter on 3/4 inch in circumference should not be mounted on the same dual wheel.

Tire Inflation Pressure and Limits

Enough cannot be said about the proper tire inflation for your Travis semi-trailer. The life of the tire and the handling characteristics of the tractor and trailer rig are greatly dependent on the correct tire inflation pressures. See tire inflation chart.

For sustained high speed driving over 60 mph, cold inflation pressures must be increased 10 psi above those specified for the load being carried (but not to exceed 100 psi). Where the pressure adjustment for sustained high speed is limited by the maximum of 100 psi, speed must be limited to 60 mph.

Inspect Tires and Check Air pressures

Inspect the tires and remove all stones, nails, glass, or other objects that may have wedged in the tread. Check for holes or cuts that may permit air leakage from the tire and make any necessary repairs.

Inspect the tire side walls for cuts, bruises, and other damage. If internal damage is suspected, remove the tire from the wheel for further inspection and repair or replacement.

Check the tire valve and extension for air leaks, and replace valve if necessary. Replace any missing valve caps.

The tires should be checked frequently when cold or before operation to be sure that the air pressure agrees with the specification for the tires and semi-trailer model.

Inspect tires for uneven wear that might indicate the need for axle alignment.

Tire Sizes

When replacing tires or wheels, it is mandatory to use only the standard or optional tire sizes and types recommended on the Safety and Serial Plate attached to the semi-trailer. Wheel rim widths and offsets must be those recommended by the trailer manufacturer for that tire size.

Tires and wheels other than those recommended can adversely affect the safety and durability of your semi-trailer, and therefore, must not be used.

All tires and wheels on the semi-trailer should be of the same size, type and load carrying capacity. Never mix radial, belted, and/or conventional-type tires.

TIRE SAFETY
Everything Rides On It

Protection against avoidable breakdowns and crashes. Improved vehicle handling. Better fuel economy. Increased tire life. Just a few of the reasons to take five minutes every month to check your tires. Simply use the handy checklist below, and see the reverse side for more information on tire safety.

Safety Checklist

- Check tire pressure regularly (at least once a month), including the spare.
- Inspect tires for uneven wear patterns on the tread, cracks, foreign objects, or other signs of wear or trauma. Remove bits of glass and other foreign objects wedged in the tread.
- Make sure your tire valves have valve caps.
- Check tire pressure before going on a long trip.
- Do not overload your vehicle. Check the tire information placard or owner's manual for the maximum recommended load for the vehicle.
- If you are towing a trailer, remember that some of the weight of the loaded trailer is transferred to the towing vehicle.

Safety Tips

- Slow down if you have to go over a pothole or other object in the road.
- Do not run over curbs, and try not to strike the curb when parking.

Remember to check your tires once a month!

There's Safety In Numbers

You can find the numbers for recommended tire pressure and vehicle load limit on the tire information placard and in the vehicle owner's manual. Tire placards are permanent labels attached to the vehicle door edge, doorpost, glove-box door, or inside of the trunk lid. Once you've located this information, use it to check your tire pressure and to make sure your vehicle is not overloaded--especially when you head out for vacation.

Checking Tire Pressure

Because tires may naturally lose air over time, it is important to check your tire pressure at least once a month. For convenience, purchase a tire pressure gauge to keep in your vehicle. Gauges can be purchased at tire dealerships, auto supply stores, and other r

etail outlets. Remember, the tire inflation number that vehicle manufacturers provide reflects the proper pounds per square inch (psi) when a tire is cold. To get an accurate tire pressure reading, measure tire pressure when the car has been unused for at least three hours.

Step 1: Locate the correct tire pressure on the tire information placard or in the owner's manual.

Step 2: Record the tire pressure of all tires.

Step 3: If the tire pressure is too high in any of the tires, slowly release air by gently pressing on the tire valve with the edge of your tire gauge until you get to the correct pressure.

Step 4: If the tire pressure is too low, note the difference between the measured tire pressure and the correct tire pressure. These "missing" pounds of pressure are what you will need to add.

Step 5: At a service station, add the missing pounds of air pressure to each tire that is underinflated.

Step 6: Check all the tires to make sure they have the same air pressure (except in cases in which the front and rear tires are supposed to have different amounts of pressure).

Checking Tire Tread

Tires have built-in treadwear indicators that let you know when it is time to replace your tires. These indicators are raised sections spaced intermittently in the bottom of the tread grooves. When they appear even with the outside of the tread, it is time to replace your tires. You can also test your tread with a Lincoln penny. Simply turn the penny so Lincoln's head is pointing down and insert it into the tread. If the tread doesn't cover Lincoln's head, it's time to replace your tires.

For a free brochure visit http://www.nhtsa.dot.gov/ or call 1-888-327-4236.

Studies of tire safety show that maintaining proper tire pressure, observing tire and vehicle load limits (not carrying more weight in your vehicle than your tires or vehicle can safely handle), avoiding road hazards, and inspecting tires for cuts, slashes, and other irregularities are the most important things you can do to avoid tire failure, such as tread separation or blowout and flat tires. These actions, along with other care and maintenance activities, can also:

- Improve vehicle handling
- Help protect you and others from avoidable breakdowns and accidents
- Improve fuel economy
- Increase the life of your tires.

This booklet presents a comprehensive overview of tire safety, including information on the following topics:

- Basic tire maintenance
- Uniform Tire Quality Grading System
- Fundamental characteristics of tires
- Tire safety tips.

Use this information to make tire safety a regular part of your vehicle maintenance routine. Recognize that the time you spend is minimal compared with the inconvenience and safety consequences of a flat tire or other tire failure.

Safety First–Basic Tire Maintenance

Properly maintained tires improve the steering, stopping, traction, and load-carrying capability of your vehicle. Underinflated tires and overloaded vehicles are a major cause of tire failure. Therefore, as mentioned above, to avoid flat tires and other types of tire failure, you should maintain proper tire pressure, observe tire and vehicle load limits, avoid road hazards, and regularly inspect your tires.

Finding Your Vehicle's Recommended Tire Pressure and Load Limits

Tire information placards and vehicle certification labels contain information on tires and load limits. These labels indicate the vehicle manufacturer's information including:

- Recommended tire size
- Recommended tire inflation pressure
- Vehicle capacity weight (VCW–the maximum occupant and cargo weight a vehicle is designed to carry)
- Front and rear gross axle weight ratings (GAWR–the maximum weight the axle systems are designed to carry).

Both placards and certification labels are permanently attached to the vehicle door edge, door post, glove-box door, or inside of the trunk lid. You can also find the recommended tire pressure and load limit for your vehicle in the vehicle owner's manual.

Understanding Tire Pressure and Load Limits

Tire inflation pressure is the level of air in the tire that provides it with load-carrying capacity and affects the overall performance of the vehicle. The tire inflation pressure is a number that indicates the amount of air pressure– measured in pounds per square inch (psi)–a tire requires to be properly inflated. (You will also find this number on the vehicle information placard expressed in kilopascals (kPa), which is the metric measure used internationally.)
Manufacturers of passenger vehicles and light trucks determine this number based on the vehicle's design load limit, that is, the greatest amount of weight a vehicle can safely carry and the vehicle's tire size.The proper tire pressure for your vehicle is referred to as the "recommended cold inflation pressure." (As you will read below, it is difficult to obtain the recommended tire pressure if your tires are not *cold*.) Because tires are designed to be used on more than one type of vehicle, tire manufacturers list the "maximum permissible inflation pressure" on the tire sidewall. This number is the greatest amount of air pressure that should *ever* be put in the tire under normal driving conditions.

Remember, however, that the *vehicle* manufacturer, not the *tire* manufacturer, determines the correct tire pressure for the tires on your vehicle.

Checking Tire Pressure
It is important to check your vehicle's tire pressure at least once a month for the following reasons:
• Most tires may naturally lose air over time.
• Tires can lose air suddenly if you drive over a pothole or other object or if you strike the curb when parking.
• With radial tires, it is usually not possible to determine underinflation by visual inspection.

For convenience, purchase a tire pressure gauge to keep in your vehicle. Gauges can be purchased at tire dealerships, auto supply stores, and other retail outlets. The recommended tire inflation pressure that vehicle manufacturers provide reflects the proper psi when a tire is *cold*. The term *cold* does not relate to the outside temperature. Rather, a *cold* tire is one that has not been driven on for at least three hours. When you drive, your tires get warmer, causing the air pressure within them to increase. Therefore, to get an accurate tire pressure reading, you must measure tire pressure when the tires are *cold* or compensate for the extra pressure in warm tires.

Steps for Maintaining Proper Tire Pressure
Step 1: Locate the recommended tire pressure on the vehicle's tire information placard, certification label, or in the owner's manual.
Step 2: Record the tire pressure of all tires.
Step 3: If the tire pressure is too high in any of the tires, slowly release air by gently pressing on the tire valve stem with the edge of your tire gauge until you get to the correct pressure.
Step 4: If the tire pressure is too low, note the difference between the measured tire pressure and the correct tire pressure. These "missing" pounds of pressure are what you will need to add.
Step 5: At a service station, add the missing pounds of air pressure to each tire that is underinflated.
Step 6: Check all the tires to make sure they have the same air pressure (except in cases in which the front and rear tires are supposed to have different amounts of pressure).
If you have been driving your vehicle and think that a tire is underinflated, fill it to the recommended cold inflation pressure indicated on your vehicle's tire information placard or certification label. While your tire may still be slightly underinflated due to the extra pounds of pressure in the warm tire, it is safer to drive with air pressure that is slightly lower than the vehicle manufacturer's recommended cold inflation pressure than to drive with a significantly underinflated tire. Since this is a temporary fix, don't forget to recheck and adjust the tire's pressure when you can obtain a cold reading.

Tire Size

To maintain tire safety, purchase new tires that are the same size as the vehicle's original tires or another size recommended by the manufacturer. Look at the tire information placard, the owner's manual, or the sidewall of the tire you are replacing to find this information. If you have any doubt about the correct size to choose, consult with the tire dealer.

Tire Tread

The tire tread provides the gripping action and traction that prevent your vehicle from slipping or sliding, especially when the road is wet or icy. In general, tires are not safe and should be replaced when the tread is worn down to 1/16 of an inch. Tires have built-in treadwear indicators that let you know when it is time to replace your tires. These indicators are raised sections spaced intermittently in the bottom of the tread grooves. When they appear "even" with the outside of the tread, it is time to replace your tires. Another method for checking tread depth is to place a penny in the tread with Lincoln's head upside down and facing you. If you can see the top of Lincoln's head, you are ready for new tires.

Tire Balance and Wheel Alignment

To avoid vibration or shaking of the vehicle when a tire rotates, the tire must be properly balanced. This balance is achieved by positioning weights on the wheel to counterbalance heavy spots on the wheel-and-tire assembly. A wheel alignment adjusts the angles of the wheels so that they are positioned correctly relative to the vehicle's frame. This adjustment maximizes the life of your tires and prevents your car from veering to the right or left when driving on a straight, level road. These adjustments require special equipment and should be performed by a qualified technician.

Tire Rotation

Rotating tires from front to back and from side to side can reduce irregular wear (for vehicles that have tires that are all the same size). Look in your owner's manual for information on how frequently the tires on your vehicle should be rotated and the best pattern for rotation.

Tire Repair

The proper repair of a punctured tire requires a plug for the hole and a patch for the area inside the tire that surrounds the puncture hole. Punctures through the tread can be repaired if they are not too large, but punctures to the sidewall should not be repaired. Tires must be removed from the rim to be properly inspected before being plugged and patched.

Uniform Tire Quality Grading System (UTQGS)

To help consumers compare a passenger car tire's treadwear rate, traction performance, and temperature resistance, the federal government requires tire manufacturers to grade tires in these three areas. This grading system, known as the Uniform Tire Quality Grading System, provides guidelines for making relative comparisons when purchasing new tires. You also can use this information to inquire about the quality of tires placed on new vehicles.

Although this rating system is very helpful when buying new tires, it is not a safety rating or guarantee of how well a tire will perform or how long it will last. Other factors such as personal driving style, type of car, quality of the roads, and tire maintenance habits have a significant influence on your tire's performance and longevity. Treadwear grades are an indication of a tire's relative wear rate. The higher the treadwear number is, the longer it should take for the tread to wear down. For example, a tire grade of 400 should wear twice as long as a tire grade of 200. Traction grades are an indication of a tire's ability to stop on wet pavement. A higher graded tire should allow you to stop your car on wet roads in a shorter distance than a tire with a lower grade. Traction is graded from highest to lowest as "AA", "A", "B", and "C". Temperature grades are an indication of a tire's resistance to heat. Sustained high temperature (for example, driving long distances in hot weather), can cause a tire to deteriorate, leading to blowouts and tread separation. From highest to lowest, a tire's resistance to heat is graded as "A", "B", or "C".

Tire Fundamentals

Federal law requires tire manufacturers to place standardized information on the sidewall of all tires. This information identifies and describes the fundamental characteristics of the tire and also provides a tire identification number for safety standard certification and in case of a recall.

Information on Passenger Vehicle Tires

Radial
Ratio of height to
width (aspect ratio)
Nominal width of
tire in millimeters
Passenger
car tire
pressure
inflation
permissible
Max.
Rim diameter
code
speed symbol
Load index &
U.S. DOT tire
identification number
Severe snow
conditions
Tire ply
composition
and materials
used
Treadwear, traction
and temperature grades Max. load rating

P

The “P” indicates the tire is for passenger vehicles.

Next number

This three-digit number gives the width in millimeters of the tire from sidewall edge to sidewall edge. In general, the larger the number, the wider the tire.

Next number

This two-digit number, known as the aspect ratio, gives the tire’s ratio of height to width. Numbers of 70 or lower indicate a short sidewall for improved steering response and better overall handling on dry pavement.

R

The “R” stands for radial. Radial ply construction of tires has been the industry standard for the past 20 years.

Next number

This two-digit number is the wheel or rim diameter in inches. If you change your wheel size, you will have to purchase new tires to match the new wheel diameter.

Next number

This two- or three-digit number is the tire’s load index. It is a measurement of how much weight each tire can support. You may find this information in your owner’s manual. If not, contact a local tire dealer. Note: You may not find this information on all tires because it is not required by law.

M+S

The “M+S” or “M/S” indicates that the tire has some mud and snow capability. Most radial tires have these markings; hence, they have some mud and snow capability.

Speed Rating

The speed rating denotes the speed at which a tire is designed to be driven for extended periods of time. The ratings range from 99 miles per hour (mph) to 186 mph. These ratings are listed below. Note: You may not find this information on all tires because it is not required by law.

Q 99 mph

R 106 mph

S 112 mph

T 118 mph

U 124 mph

H 130 mph

V 149 mph

W 168 mph*

Y 186 mph*

- For tires with a maximum speed capability over 149 mph, tire manufacturers sometimes use the letters ZR. For those with a maximum speed capability over 186 mph, tire manufacturers always use the letters ZR.

U.S. DOT Tire Identification Number

This begins with the letters “DOT” and indicates that the tire meets all federal standards. The next two numbers or letters are the plant code where it was manufactured, and the last four numbers represent the week and year

the tire was built. For example, the numbers 3197 means the 31st week of 1997. The other numbers are marketing codes used at the manufacturer’s discretion. This information is used to contact consumers if a tire defect requires a recall.

Tire Ply Composition and Materials Used

The number of plies indicates the number of layers of rubber-coated fabric in the tire. In general, the greater the number of plies, the more weight a tire can support. Tire manufacturers also must indicate the materials in the tire, which include steel, nylon, polyester, and others.

Maximum Load Rating

This number indicates the maximum load in kilograms and pounds that can be carried by the tire.

Maximum Permissible Inflation Pressure

This number is the greatest amount of air pressure that should ever be put in the tire under normal driving conditions.

UTQGS Information

Treadwear Number

This number indicates the tire’s wear rate. The higher the treadwear number is, the longer it should take for the tread to wear down. For example, a tire graded 400 should last twice as long as a tire graded 200.

Traction Letter

This letter indicates a tire’s ability to stop on wet pave ment. A higher graded tire should allow you to stop your car on wet roads in a shorter distance than a tire with a lower grade. Traction is graded from highest to lowest as “AA”,”A”, “B”, and “C”.

Temperature Letter

This letter indicates a tire’s resistance to heat. The temperature grade is for a tire that is inflated properly and not overloaded. Excessive speed, underinflation or excessive loading, either separately or in combination, can cause heat build-up and possible tire failure. From highest to lowest, a tire’s resistance to heat is graded as “A”, “B”, or “C”.

Additional Information on Light Truck Tires

Load range
Light truck tire Maximum load & inflation when used as a single
Load inflation limits
Maximum load conditions
Severe snow & inflation when used as a dual

Tires for light trucks have other markings besides those found on the sidewalls of passenger tires.

LT

The “LT” indicates the tire is for light trucks.

Max. Load Dual kg(lbs) at kPa(psi) Cold

This information indicates the maximum load and tire pressure when the tire is used as a dual, that is, when four tires are put on each rear axle (a total of six or more tires on the vehicle).

Max. Load Single kg(lbs) at kPa(psi) Cold

This information indicates the maximum load and tire pressure when the tire is used as a single.

Load Range

This information identifies the tire’s load-carrying capabilities and its inflation limits.

Snow Tires

In some heavy snow areas, local governments may require true snow tires, those with very deeply cut tread. These tires should only be used in pairs or placed on all four wheels. Make sure you purchase snow tires that are the same size and construction type as the other tires on your vehicle.

GLOSSARY OF TIRE TERMINOLOGY

Accessory weight
The combined weight (in excess of those standard items which may be replaced) of automatic transmission, power steering, power brakes, power windows, power seats, radio and heater, to the extent that these items are available as factoryinstalled equipment (whether installed or not).

Bead
The part of the tire that is made of steel wires, wrapped or reinforced by ply cords and that is shaped to fit the rim.

Bead separation
This is the breakdown of the bond between components in the bead.

Bias ply tire
A pneumatic tire in which the ply cords that extend to the beads are laid at alternate angles substantially less than 90 degrees to the centerline of the tread.

Carcass
The tire structure, except tread and sidewall rubber which, when inflated, bears the load.

Chunking
The breaking away of pieces of the tread or sidewall.

Cold inflation pressure
The pressure in the tire before you drive.

Cord
The strands forming the plies in the tire.

Cord separation
The parting of cords from adjacent rubber compounds.

Cracking
Any parting within the tread, sidewall, or inner liner of the tire extending to cord material.

CT
A pneumatic tire with an inverted flange tire and rim system in which the rim is designed with rim flanges pointed radially inward and the tire is designed to fit on the underside of the rim in a manner that encloses the rim flanges inside the air cavity of the tire.

Curb weight
The weight of a motor vehicle with standard equipment including the maximum capacity of fuel, oil, and coolant, and, if so equipped, air conditioning and additional weight optional engine.

Extra load tire
A tire designed to operate at higher loads and at higher inflation pressures than the corresponding standard tire.

Groove
The space between two adjacent tread ribs.

Inner liner
The layer(s) forming the inside surface of a tubeless tire that contains the inflating medium within the tire.

Inner liner separation
The parting of the inner liner from cord material in the carcass.

Intended outboard sidewall
The sidewall that contains a white-wall, bears white lettering or bears manufacturer, brand, and/or model name molding that is higher or deeper than the same molding on the other sidewall of the tire or the outward facing sidewall of an asymmetrical tire that has a particular side that must always face outward when mounted on a vehicle.

Light truck (LT) tire
A tire designated by its manufacturer as primarily intended for use on lightweight trucks or multipurpose passenger vehicles.

Load rating
The maximum load that a tire is rated to carry for a given inflation pressure.

Maximum load rating
The load rating for a tire at the maximum permissible inflation pressure for that tire.

Maximum permissible inflation pressure
The maximum cold inflation pressure to which a tire may be inflated.

Maximum loaded vehicle weight
The sum of curb weight, accessory weight, vehicle capacity weight, and production options weight.

Measuring rim
The rim on which a tire is fitted for physical dimension requirements.

Non-pneumatic rim
A mechanical device which, when a non-pneumatic tire assembly incorporates a wheel, supports the tire, and attaches, either integrally or separably, to the wheel center member and upon which the tire is attached.

Non-pneumatic spare tire assembly
A non-pneumatic tire assembly intended for temporary use in place of one of the pneumatic tires and rims that are fitted to a passenger car in compliance with the requirements of this standard.

Non-pneumatic tire
A mechanical device which transmits, either directly or through a wheel or wheel center member, the vertical load and tractive forces from the roadway to the vehicle, generates the tractive forces that provide the directional control of the vehicle and does not rely on the containment of any gas or fluid for providing those functions.

Non-pneumatic tire assembly
A non-pneumatic tire, alone or in combination with a wheel or wheel center member, which can be mounted on a vehicle.

Normal occupant weight
This means 68 kilograms (150 lbs.) times the number of occupants specified in the second column of Table I of 49 CFR 571.110.

Occupant distribution
The distribution of occupants in a vehicle as specified in the third column of Table I of 49 CFR 571.110.

Open splice
Any parting at any junction of tread, sidewall, or inner liner that extends to cord material.

Outer diameter
The overall diameter of an inflated new tire.

Overall width
The linear distance between the exteriors of the sidewalls of an inflated tire, including elevations due to labeling, decorations, or protective bands or ribs.

Ply
A layer of rubber-coated parallel cords.

Ply separation
A parting of rubber compound between adjacent plies.

Pneumatic tire
A mechanical device made of rubber, chemicals, fabric and steel or other materials, that, when mounted on an automotive wheel, provides the traction and contains the gas or fluid that sustains the load.
Production options weight
The combined weight of those installed regular production options weighing over 2.3 kilograms (5 lbs.) in excess of those standard items which they replace, not previously considered in curb weight or accessory weight, including heavy duty brakes, ride levelers, roof rack, heavy duty battery, and special trim.
Radial ply tire
A pneumatic tire in which the ply cords that extend to the beads are laid at substantially 90 degrees to the centerline of the tread.
Recommended inflation pressure
This is the inflation pressure provided by the vehicle manufacturer on the Tire Information label and on the Certification / VIN tag.
Reinforced tire
A tire designed to operate at higher loads and at higher inflation pressures than the corresponding standard tire.
Rim
A metal support for a tire or a tire and tube assembly upon which the tire beads are seated.
Rim diameter
This means the nominal diameter of the bead seat.
Rim size designation
This means the rim diameter and width.
Rim type designation
This means the industry of manufacturer's designation for a rim by style or code.
Rim width
This means the nominal distance between rim flanges.
Section width
The linear distance between the exteriors of the sidewalls of an inflated tire, excluding elevations due to labeling, ecoration, or protective bands.
Sidewall
That portion of a tire between the tread and bead.
Sidewall separation
The parting of the rubber compound from the cord material in the sidewall.
Test rim
The rim on which a tire is fitted for testing, and may be any rim listed as
appropriate for use with that tire.
Tread
That portion of a tire that comes into contact with the road.
Tread rib
A tread section running circumferentially around a tire.
Tread separation
Pulling away of the tread from the tire carcass.
Treadwear indicators (TWI)
The projections within the principal grooves designed to give a visual indication of the degrees of wear of the tread.
Vehicle capacity weight
The rated cargo and luggage load plus 68 kilograms (150 lbs.) times the vehicle's designated seating capacity.
Vehicle maximum load on the tire
The load on an individual tire that is determined by distributing to each axle its share of the maximum loaded vehicle weight and dividing by two.
Vehicle normal load on the tire
The load on an individual tire that is determined by distributing to each axle its share of the curb weight, accessory weight, and normal occupant weight (distributed in accordance with Table I of CRF 49 571.110) and dividing by 2.
Weather side
The surface area of the rim not covered by the inflated tire.
Wheel center member
In the case of a non-pneumatic tire assembly incorporating a wheel, a mechanical device which attaches, either integrally or separably, to the non-pneumatic rim and provides the connection between the non-pneumatic rim and the vehicle; or, in the case of a non-pneumatic tire assembly not incorporating a wheel, a mechanical device which attaches, either integrally or separably, to the non-pneumatic tire and provides the connection between tire and the vehicle.
Wheel-holding fixture
The fixture used to hold the wheel and tire assembly securely during testing.

WHEEL BEARING MAINTENANCE AND ADJUSTMENT

The wheel bearings on your semi-trailer are oil lubricated and if there are no leaks, and proper oil level and bearing adjustments are maintained, your semi-trailer will be road ready. Bearings are one of the hardest worked components used on your semi-trailer. Their life depends on three factors: (1) correct lubrication, (2) cleanliness, and (3) correct adjustment. The following procedures are recommended when servicing wheel bearings.

Wheel Bearing Check

To check wheel bearing adjustments, the semi-trailer should be empty and the brakes in a released or off position. On semi-trailers equipped with spring parking brakes, all spring forces must be released from the slack adjusters and cam shafts. Supply air to the spring brake chambers to relieve the spring forces.

Raise the semi-trailer wheels with the jacks placed under the axles as close to the wheels as possible. If the wheels turn hard, determine whether it is brake shoe drag or tight wheel bearings. Eliminate any brake shoe drag by adjusting brakes. After adjustment, if brakes and wheel still turn hard, the bearings are too tight. Test for excessive end play or wobble. Stand in front of a wheel, rest one end of a pry bar on the floor under tire and lift up on the tire. By working the bar up and down while holding one hand against the top of the outer tire, excessive end play can be quickly detected. If bearings are adjusted correctly, movement of the wheel will be barely perceptible, and will turn freely with no drag. If any excessive in-and-out free play is noticed, adjust the bearings.

Wheel Bearing Adjustment Procedure (Double Nut Arrangement)

1. Raise the semi-trailer so the tires are free of the floor or ground. All brakes must be in a released position.

2. Using a hubcap and axle nut wrench , remove hubcap and drain oil into a clean container.

3. For axles that use set screws as an added safety device, remove the set screw. Remove the outer axle nut. Remove the inner locking washer. For trailers that use a star washer as the locking device. remove the star washer by unfolding the locking tabs. Check that the brake linings are not dragging on the brake drum . Back off or, remove the inner axle nut if necessary. Rotate the wheel in both directions and inspect the general condition of the outer bearings.

4. If it is necessary to pull wheels, hubs, and bearings for inspection, all surfaces and bearings should be cleaned. Clean bearings, cups, axle spindle and inside of hub with mineral spirits or kerosene. Dry all parts thoroughly with a soft stream of dry compressed air or with a clean lint free cloth. Cover clean bearings to protect them from dirt until ready for installation.

CAUTION: When drying bearings with air, never spin bearings as this can cause serious damage to the bearings. Inspect bearings for excessive wear, missing rollers, galling breaks, cracks, chipping and pitting. Replace bearings if any of these conditions exist.

5. After properly installing the bearing cones and wheel-end seal onto the spindle, and the wheel-end is slid onto the spindle, tighten the inner spindle nut with a torque wrench to 150-200 ft. lbs. to set the bearings and wheel end.

CAUTION: DO NOT USE AN AIR IMPACT WRENCH TO TIGHTEN THIS NUT!

6. Loosen this inner nut to allow the brake drum to rotate freely. Backing off one full turn is recommended.

7. Retighten the inner spindle nut to 50 ft. lbs. by hand using a torque wrench to position the bearings for final adjustment.

CAUTION: DO NOT USE AN AIR IMPACT WRENCH TO TIGHTEN THIS NUT!

8. Back the inner spindle nut off 1/4 turn. Install the retaining fastener or fasteners (inner washer and star washer) onto the spindle according to the fastener used. If washers are used, be sure they are facing in the right direction and are clean. Make sure any washers with dowels fit properly into mating holes (Reinstall the

set screw if used). Install the outer spindle nut. Using a torque wrench, tighten this nut to 250-300 ft lbs. Resulting end play should be .001" to .005".

9. Lubricate hubcap O-ring and hubcap threads with oil. Place O-ring on hubcap. Install hubcap and torque to 60-70 ft.-lb. with torque wrench.

10. Remove hubcap plug and fill wheel assembly through hubcap port hole with (SAE80) oil to mark on hubcap. One to 1-1/2 pints of oil are required for one hub depending on wheel well design. Allow plenty of time for the oil to seep through the bearings and seek a level on initial fill. When properly filled, oil should be on the oil level mark of the hubcap window. Do not overfill.

11. Install rubber hubcap plug.

Servicing

The oil level should be checked at regular maintenance intervals. If the hub is removed from the spindles to service brake drums, check the oil seal for possible damage during removal. If the oil seal is damaged, it must be replaced. It is recommended that oil seals be replaced at brake reline or every 100,000 miles.

AXLE ALIGNMENT

Proper axle alignment is an important factor in the operation and maintenance of your trailer. Axle alignment must be checked periodically, especially if your semi-trailer has excessive tire wear, or is dog-tracking. It should also be checked and adjusted whenever axle or suspension component are moved and/or replaced.

The following methods are suggested as a quick and simple on the spot check of axle alignment.

Note: A 50 foot steel tape can be attached to the axle spindle then hooked over the kingpin.

1. Position the trailer on level ground (preferably concrete) with a tractor, being sure to have the driver pull forward at least twice in a straight line to permit connecting linkage to properly position itself and to center front and rear wheel track. The trailer should be empty and the brakes in a released or off position. Chock wheels to prevent trailer movement.

2. Lower the supports so that the trailer is in a level position.

3. Uncouple the tractor from the trailer.

4. After the trailer is in position and the tractor removed, attach the kingpin hookplate to the kingpin of the trailer. All axles should be properly aligned in relation to the trailer kingpin.

5. Using 50 foot steel tape, measure from the kingpin to the center of the axle spindle. Make note of the measurement obtained on this side and compare it with the measurement taken on the opposite side of the trailer. The distances must be within 1/8" of each other. If dimensions are not within this range, it indicates the axle is out of alignment and must be adjusted. Perform alignment as required.

6. With the front axle aligned, measure the distances between the front and rear axle. These distances must be equal to within 1/16" of each other.

Note: All axles are aligned from the front axle. It is important that axle spacing is exactly the same at both ends of the axle.

If any of these measurements do not fall within the stated limits, the semi-trailer suspension should be thoroughly inspected for loose, worn, or broken connecting and supporting parts. Adjustments in the suspension and replacement of worn or broken parts should be made to bring the axle into alignment.

4-Spring Model Suspension Axle Alignment

If adjustments to the front axle are required, loosen the roadside adjustable radius rod clamp bolts and turn the rod to move the axle forward or backward. After adjustment is completed special attention should be given the radius rod clamp bolts to verify that they are tightened sufficiently.

After completing the alignment of the front axle, the rear axle should be checked.

CAUTION: DO NOT ALTER THE POSITION OF THE FRONT AXLE ONCE IT HAS BEEN ADJUSTED.

The rear axle is aligned in relation to the position of the front axle. This is done by measuring the distance from the center point of the front axle spindle to the center of the rear spindle. These two dimensions must be within 1/16" of each other. If they are not, adjust the rear axle in the same manner as previously instructed for the front axle.

2-Spring Model Axle Alignment

The two spring or single point suspension is aligned and welded in position at the factory. Under normal operating conditions, the suspension should not require any additional alignment. The suspensions can become miss-aligned due to excessive wear or damage to component parts. Under these circumstances, it is recommended that you return your semitrailer to the nearest authorized Travis Body & Trailer, Inc. repair shop.

Tandem Air Ride Axle Alignment

The air ride suspension is welded in place at the factory. The realignment procedure involves removal of the welded on huck bolt from the alignment slot in the suspension hangar, adjusting the alignment as required then replacing the bolt and rewelding into place. It is recommended that this work be performed by a qualified semi trailer repair shop or your Travis dealer.

For Hendrickson HT series trailer suspensions it is recommended that the QUICK-ALIGN(tm) pivot bolt (7/8' dia.) be used at a torque of 500 ft. lbs. Use the appropriate fastener kit on any QUICK-ALIGN axle realignment to ensure proper torque without the use of a torque wrench.

HUTCH 9600-9700 SUSPENSION TORQUE REQUIREMENTS

After an initial break in period, approximately 1000 miles, and at least every 4 months periodically thereafter, ALL bolts and nuts should be checked to insure that recommended torque values are being maintained. Oiled torque values are listed for new fasteners with lubricated threads. For dry threads which have been in service, use the higher torque values.

	OILED (ft.lbs.)	DRY (ft.lbs.)
1 1/8-7 (9600/9700 Rocker Bolt)	**590**	**790**
1-14 (9700 Radius Rod Bolt)	**540**	**720**
7/8-14 (Axle U-Bolts & 9600 Radius Rod Bolt)	**350**	**470**
3/4-16 (Axle U-Bolts)	**310**	**420**
5/8-18 (Radius Rod Clamp Bolt)	**130**	**170**
5/8-18 (Spring Retainer Bolt)	**35**	**50**

REYCO MODEL 21B SUSPENSION TORQUE REQUIREMENTS

Check Torque Values After "Break-in" period of approximately 1000 miles, or 1600 kilometers and periodically (each 180 days) thereafter. Retorque at the "break-in" period is required to comply with warranty requirements and to assure long trouble-free performance. Torque requirements are as follows for fasteners with lightly lubricated threads.

	foot-lbs.
U-Bolt Nuts, 7/8-14 or 3/4-16	**300-325**
Torque Arm End Nuts, 1-14	**500-525**
Adj Torque Arm Clamp Nuts, 3/4-10	**175-200**
Adj Torque Arm Clamp Nuts, 5/8-18	**125-150**
Equalizer Bolts, 1-8	**450-500**
Retainer Bolt Nuts, 1/2-20	**70-80**

HT SERIES TORQUE SPECIFICATIONS

Recommended Retorquing Schedule: first 5000 miles, StandardP.M.s, Every brake relining.

	foot lbs.
QUICK ALIGN (tm) Pivot Bolt (7/8")	**500**
Pivot Bolt (1-1/8")	**800**
Shock Bolt	**150**
Upper Air Spring Nut	**45**
Lower Air Spring Bolt	**25**
Axle U-bolt	**475**

HUTCH 900 TORQUE REQUIREMENTS:

Oiled torque values listed are for new fasteners with lubricated threads. It is recommended that new installations be performed with oiled fasteners. For dry threads which have been in service, use the higher torque values which are note below.

	OILED (ft.lbs.)	DRY (ft.lbs.)
1 1/8-12 UNF	**670**	**880**
1-14 UNF	**540**	**730**
3/4-16 UNF	**220**	**300**
5/8-18 UNF	**130**	**180**

CARE AND MAINTENANCE OF LEAF SPRINGS

(BASED ON HUTCH 900 Series 3-leaf or Watson 5-leaf spring single point suspensions)

The leaf springs are working, flexible components and the main supporting members of a semi-trailer suspension. They cushion the semi-trailer and its load from various road shocks and provide necessary stability. A reasonable amount of care and maintenance is required to provide satisfactory service life. The springs must be tightly clamped to the spring seat and the axle to prevent any movement between U-bolts, which results in misalignment of axles. It is important that spring U-bolts be checked for proper tightness regularly during the first few months of service or until such time as the spring leaves wear-in with usage. Thereafter, they should be checked periodically as a matter of normal maintenance.

To obtain maximum service from the springs on your semi-trailer, the following steps should be followed:

1. The U-bolts are adjusted to the proper torque specification before delivery of your semi-trailer. They should be retorqued at the end of the first 1000 miles of operation.

2. Retorque U-bolts at regular maintenance intervals (at least every 4 months after). A loose U-bolt permits play that results in breakage. Checking the U-bolts frequently is a wise precaution since all U-bolts tend to stretch.

3. Broken spring leaves between the U-bolts indicate loose U-bolts. Replace the spring at the earliest opportunity.

4. Never replace only one leaf of a multi-leaf spring. Replace the complete spring. Replacing a single spring leaf may often be false economy. If one leaf is broken, the rest of the leaves have fatigued and are probably ready to break also. It is also advised that in a single point suspension, replace both spring packs. Over time,

the spring packs will fatigue such that by replacing only one side will cause an uneven stiffness resulting in instability to the trailer.

5. Always use hardened steel washers with U-bolts and nuts. This provides uniform torque on the U-bolts.

6. Always replace U-bolts as a pair for best performance.

7. Cracked or broken springs outside the U-bolt are an indication of:
    a. Repeated overload, or
    b. Spring assembly has completed its normal life cycle.

In either case, the entire spring assembly should be replaced. Remember, failure to retorque the U-bolts can result in improper axle alignment, spring breakage, abnormal wear, and/or unsafe operating conditions. Verify That your suspension is always safe and road ready.

MAINTAINING AN AIR RIDE SUSPENSION

Daily

A quick look to verify that the trailer is level and riding at the correct height will help you find obvious problems. A closer review can detect broken or loose parts before any serious problems appear.

30 Days

Review clearances around air springs, tires , shock absorbers and all other moving parts. Any evidence of part interference or rubbing deserves immediate review by a qualified mechanic. Bolts should be secure, axle connections tight and any sign of wear should be noted.

90 Days

Thoroughly check all items as indicated above. Also check all welded connections for signs of deterioration.

Replacing an Air Spring

Air springs will last almost indefinitely in most applications. However, they fail quickly if rubbed, scuffed or punctured. To replace an air spring, exhaust all of the air from the suspension system, then raise the vehicle and support it in a safe manner. Next, simply unbolt the air spring and connecting air supply and bolt the replacement in place.

Replacing a Shock Absorber

Contrary to popular belief, shock absorbers do absorb shock. They absorb energy to prevent suspension oscillation. They are also used as rebound stops in most air suspensions. To replace the shock absorbers, when required, simply remove the end fasteners and insert the new shock absorber.

DO NOT LIFT THE VEHICLE WITHOUT THE SHOCK ABSORBER IN PLACE AS AIR SPRING DAMAGE MAY OCCUR.

Note: Some models use retaining chains in lieu of shocks. In replacing chains make sure that they will not rub the air bags and that they properly restrict the upward travel of the air spring.

Rebushing

Rebushing a Hendrickson Turner suspension will require the use of a Hendrickson Turner Bushing Removal/ Installation Tool (part #C-5994). The tool is used in conjunction with a 10 ton portapower unit. Also required is a bushing kit (part #A-6914).

Height Control Valve

The height control valve automatically responds to the relative position of the axle and the trailer frame. When the actuating lever is moved up, the valve opens and connects air supply to the air spring. When the lever is down, the air supply is shut off, the exhaust port of the valve is connected to the air springs exhausting air from the air spring to the atmosphere. In the central position, the valve has a dead zone of approximately 3/8". This dead zone eliminates constant oscillation of the system.

Air Dump Valves

Air dump valves are typically added to trailer air suspensions to increase stability during the loading and unloading process. The use of the air dump control is approved only for the following situations:

- A trailer parked for any length of time.
- A trailer being loaded or unloaded.
- A dump trailer during the DUMP MODE ONLY.
- A trailer experiencing a sudden off loading of cargo (e.g. steel removed with a crane).

NOTE: DUE TO THE GEOMETRY OF ALL TRAILING BEAM AIR SUSPENSIONS, THE TRAILER WILL MOVE FORWARD WHEN THE AIR IS EXHAUSTED FROM THE SUSPENSION. WHEN SUPPORTED BY THE TRAILER LANDING GEAR, THIS MOVEMENT MAY CAUSE DAMAGE OR COLLAPSE THE LEGS. ALWAYS EXHAUST THE AIR BEFORE LOCKING THE BRAKES.

AIR BRAKE MAINTENANCE

Successful maintenance of the air brake system depends upon systematic inspection and repair at regular intervals. The length of these intervals depends upon the trailer operation and mileage. Included in this manual is Travis's recommended service schedule (see Section V). If followed correctly, your semi-trailer will always be road ready. Adjustments, inspections, and minor repairs that can be performed by you are listed below. These procedures must include immediate replacement of all worn or damaged parts.

RESERVOIR TANK

The first requirement in an air brake system is clean air at proper pressure. The operator must open the drain cock on the underside of the reservoirs and drain all the moisture. Leave the drain cock in the open position until all moisture has escaped.

Drainage should be done periodically to remove water and sludge from the system. This is especially important in cold weather to forestall freezing and obstruction of the lines and valves. Each tank must be drained completely to ensure removal of condensation. After removing moisture, close the drain cock and inspect reservoirs for looseness or damage. Verify That all connections are tight and brake lines are properly supported.

GLAD-HANDS

Inspect glad-hands to ensure proper operation without obstructions. With the semi-trailer connected to the tractor and air in the system, coat the glad-hands and mountings with soapsuds to verify that there is no leakage. Be certain the glad-hand seals are in good condition and not saturated with grease, oil or other foreign material. We recommend annual replacement of glad-hand seals.

BRAKE TUBING, LINES, FITTINGS & HOSES

Visually inspect brake lines and hoses for loose connections, chafing, cracks, breaks, cuts, bruises, broken-out sections and deterioration. Replace immediately upon first sign of any of the above. Exercise extreme caution when working or welding around nylon tubing, if so equipped. It is recommended that tubing in areas where welding operations are performed be removed prior to welding operations, and reinstalled after welding is completed. If tubing removal is not practical, the tubing must be shielded from welding sparks and/or heat damage.

SERVICE AND SPRING BRAKE CHAMBERS

Visually check air chamber clamp bands and mounting nuts for tightness. Torque chamber mounting nuts to 75 to 100 ft. lb. Check chambers for damage or dents and any sign of leaks.

Caution: Disassembly and repair of any spring brake is a dangerous and complex task which should not be undertaken by an inexperienced mechanic. Special tools and information are required if serious personal injury is to be avoided. Refer problems of this sort to your Travis dealer.

AIR VALVES

Inspect all air valves for leaks. If excessive leakage is found, the valve must be repaired or replaced. We recommend that air valves be replaced when necessary with new or rebuilt valves. Replacement maintenance and seal kits are available from your Travis Body & Trailer, Inc. Dealer.

BRAKE ADJUSTMENT – Older models without automatic slack adjustors

In order to ensure proper brake performance, the service brakes must be in proper adjustment regardless of whether the semi-trailer is equipped with spring brakes. Place a jack on a solid foundation to prevent it from slipping out of position and raise the semi-trailer clear of the ground.

Note: When jacking against the axle, be careful to use jacks with heads large enough to distribute the load or use wooden blocks as a cushion between the axle and jack.

If a semi-trailer is equipped with spring brakes, all spring forces must be released from the slack adjusters and cam shafts by applying air to the spring brake chambers to relieve the spring forces.

Position a wrench on the slack adjuster nut, rotate the wheel, and turn the wrench clockwise until the brakes lock. Turn the wrench counterclockwise two notches or until the wheel turns freely without brake shoe drag.

The slack adjuster is equipped with a friction type self-locking device which automatically locks brakes in position.

After adjustment, apply the brakes and hold application. The angle on the slack adjusters should not be less than 90 degrees.

All slack adjusters should be set at the same angle. Shorten or lengthen the rods at clevis yokes as required. Push rod travel should be kept at the minimum without brakes dragging.

When adjusting brakes with spring brake chambers, do not remove the push rod clevis pin or loosen the mounting nuts unless the chamber is manually disabled by caging.

Only basic adjustments and inspections can be performed without disabling the spring brake chamber. Chambers which are not equipped with a caging device should be serviced only by a Travis Body & Trailer, Inc. Repair Shop.

AUTOMATIC SLACK ADJUSTORS

Keeping slack adjustors well greased is all the maintenance that you will require.

BRAKE DRUMS

Inspect brake drums. Any accumulation of mud, dirt, or rust on the drums should be removed. Any broken or cracked drums should be removed from service.

BRAKE LINING

Inspect and check the brake lining thickness. The brake lining must be replaced if excessively worn or if coated with oil, grease, or foreign material.

ANTI-LOCK BRAKES

Your Travis trailer is equipped with an anti-lock brake system. Due to the rapidly changing technology applied to these systems, it is beyond the scope of this manual to describe the operation of the ABS system in detail. However, a current, separate manual prepared by the component system supplier is available that does contain this information.

HYDRAULIC SYSTEM MAINTENANCE (DUMP TRAILERS)

Telescopic Cylinder

Check your cylinder periodically for oil leaks. A damp to light film of oil on each plunger of a cylinder indicates good cylinder operation. After numerous cycles of the cylinder, a small accumulation of oil may be noticed on the plunger at the stuffing box and in the extended position. This should not be mistaken for packing leakage.

It is recommended that field service repairs to the cylinder be limited to adjusting packing and minor sleeve maintenance. If other damage is apparent, contact your local Travis Body & Trailer, Inc. Repair Shop.

Cylinder Sleeve

The cylinder sleeves should be checked periodically for damage. Any burrs or scratches found should be removed with a honing stone or emery cloth to prevent damage to the packing assembly.

Fittings, Hoses and Pipes

Visually inspect fittings, hoses and pipes for leaks, abrasions, crimping, breaks, cracking, or other deterioration. Replace immediately if any of the above signs of deterioration are visible.

LIGHTS AND WIRING – See Standard Wiring Diagram (Section XVII)

Lighting Maintenance

The lighting system for your semi-trailer is a heavy duty, 12 volt, 30 amp system. The 7-way connector receptacle is located on the front of the semi-trailer near the glad-hands. The jumper cable from the tractor plugs into the semi-trailer's 7-way connector to complete the electrical circuit to the semi-trailer. The receptacle is equipped with a hinge type cover to protect it from exposure to dirt and water. Semi-trailer lights are controlled by the same switches that control the lights on the tractor.

Proper maintenance of the lighting system requires periodic cleaning of lamps and reflectors. A lamp covered with a combination of mud and road salt is in danger of not being seen by other vehicles. Use a damp cloth to wipe the lenses. A dry cloth will cause the dirt to act as an abrasive and scratch the lenses. A daily cleaning can well be worth the time invested, plus, it is a good safety practice. Maintenance of the lighting and wiring system consists of an occasional inspection to see that all wiring connections are tight. Verify that the lighting

units are securely mounted to provide a good ground, and that the wiring is not pinched or damaged. Inspect lights, couplings, and sockets for their serviceability and replace as required.

Turn Signal and Hazard Flasher System

The turn signal lever and hazard flasher switch are located in the tractor. To operate the turn signals, the ignition switch must be in the ON position. The hazard flasher system is operated independently of the ignition switch in most cases. All turn signal lights can be made to flash at the same time by pulling out the activating knob on the hazard flasher switch.

Two flasher units are used for the semi-trailer. One unit is used in the turn signal circuit, and the other for the hazard flasher system located in the tractor. The most common problems with the turn signals and hazard flasher system are defective flashers, burned-out bulbs, blown fuses, defective switches or faulty wiring.

Reflectors

Reflectors are located on the front and rear sections of the semi-trailer. They should be kept clean by wiping with a damp cloth. Replace any reflectors that are cracked or broken.

Clearance, Marker, and Identification Lamps

To remove the lens and bulb, insert a screwdriver under the lens flange and pry lens out of the soft housing. Disconnect it from plug and wire assembly. To replace the lens and bulb, reconnect the plug and wire assembly, tilt the lens slightly, and push lens into the soft housing.

License Lamp

To remove the license and bulb from the license lamp, remove three (3) screws and remove the license cover. Follow the same instructions as for the clearance, marker, and identification lamps above. Install cover with three (3) screws.

Stop, Tail, Turn and Marker Lamps

To remove the bulb in the lamps, snap out the lens retainer ring. Lift out lens and gasket. Press light bulb inward and turn clockwise to release from socket. Replace the bulb, gasket, lens and retaining ring by reversing the removal procedures as outlined above. Verify that the bulb makes full contact in socket.

Lubricants for Electrical Wire Contacts

To reduce corrosion after wiring connections are made, Travis recommends that all connections be liberally coated with an anticorrosion sealant. A little lubrication maintenance of this type will keep your semi-trailer lights burning brightly.

XII. LUBRICATION

Standard Chassis Grease

Use standard chassis grease for all lubrication points having fittings. Apply grease with a suitable pressure type grease gun that fits the lubrication fittings. The gun may need a flexible extension on it to enable you to reach certain fittings.

Clean each fitting before putting the grease gun to it. Apply enough grease to purge the old grease from the lubricated joint.

When old grease oozes from the joint, you will know purging and re-lubrication is adequate.

An open-end wrench should be available to replace faulty or broken lubrication fittings. Use a rag to clean all lubrication fittings before applying lubricant. The person doing the lubricating has an opportunity to inspect parts of the vehicle which are relatively inaccessible. Any noticeable leaks of grease, excessive rusting of the chassis parts, broken, bent or damaged bolts and brackets, or other defective members should be reported for corrective action.

TYPICAL LOCATIONS OF GREASE FITTINGS

The following list provides all of the typical locations for grease fittings on most trailers. Grease at regular intervals (weekly) as required. Do not allow greased areas to dry out.

LOCATION/FEATURE	NUMBER OF FITTINGS
Hoist top	3
Hoist Bottom	1
Draft Arms at Coupler Plate	2
Draft Arms at Body	2
Latch Roll Bar	4
2-Speed Gear Box	1
2-Speed Legs	2/2
Safety Latch	1 ea.
Barn Door Hinge	3/3/2
Barn Door Handle	1
Coal Door	3
Coupler Plate	2
Slack Adjusters	1 ea
Axle	4 ea
Drag Link (Quarter Frame)	4
Frame Hinge (Frametype)	4
Q.F. Hinge	4
Center Gate	1
Slat Floor System	see slat floor manual

Wheel Bearings and Hubs

The wheel bearings on your semi-trailer are oil lubricated. Oil lubricated bearings do not normally require service as they are continually lubricated. As long as there are no leaks and the proper oil level is maintained, your semi-trailer should be OK. Travis recommends a visual inspection and changes in the lubricant every 100,000 miles or whenever brakes are relined.

To check the lubricant level, verify that the trailer is on level ground. Wipe the hubcap clean with a rag and inspect the lubricant level. The hub should be filled with all-weather SAE 80, to the level indicated by a mark on the hubcap (See Lubrication Chart and Figs. 24 and 25). MINIMUM LEVEL ALLOWABLE - 1/4 inch mark. If the lubricant level is low, remove the center plug and add oil to proper level. Do not overfill.

Supports (Two Speed)

Under normal operation conditions, your supports should never require lubrication. However, grease zerts are provided in the leg and the gearbox housing if necessary.

Brake Camshafts

Lubricate the brake camshaft bearings with chassis grease. There are four fittings located on each axle.

Brake Shoes

When brakes are relined, apply an even coat of lubricate STK 013922 between the contact face of anchor pin brushing, brake shoe area, and spider faces. Coat the anchor pin completely. Wipe off all excess grease.

Brake Roller and Cam Heads

When the wheels and hubs are removed, place a light film of lubricate on the cam roller follower shafts, journals, and the top and bottom surface of the S-cam.

Caution: Excessive grease fittings are offered as standard equipment and must be lubricated at recommended intervals. To lubricate, clean dirt and grease from the area around fitting. Apply sufficient amount of grease to completely fill the body cavity.

TRACTOR

Fifth Wheel

For longer service life and smoother operation, your fifth wheel should have a visual safety inspection and lubrication every 6,000 miles or once a month, whichever comes first. The semi-trailer must be disconnected from the tractor to perform this service operation. A major inspection, preceded by a steam cleaning, of the fifth wheel and mounting should be made every 36,000 miles or 6 months, whichever comes first. Steam clean the fifth wheel, then check for cracks, abnormal wear, or damage to the fifth wheel and its mounting. Any cracks that are developing in the fifth wheel can be discovered only by a careful visual inspection after the unit has been cleaned. Verify that all mountings are tight, and that all cracked, worn, or damaged parts are replaced. Lubricate, with a good grade of grease, the complete fifth wheel surface (see Lubrication Chart), especially if it has been exposed to weather conditions for any length of time. Clean all sand, grit, and other foreign matter from the fifth wheel base. Apply a thin film of grease with a hand paddle, brush or wide putty knife.

CAUTION: Do not over-lubricate. Excessive grease on the fifth wheel while the tractor is uncoupled usually gets pushed off when the tractor couples to the trailer. The excess may run or be wiped into the kingpin locking mechanism. Excess grease on its locking mechanism or fifth wheel jaws can interfere with coupling. The grease can also be wiped off and effect other chassis components. Unless specified by your fifth wheel supplier, do not lubricate the locking mechanism of the fifth wheel. The excess grease from the skid plate will work in and provide enough lubrication for the locking mechanism.

Check the fifth wheel locking jaws or hook (depending upon your model) and support brackets for lubrication fittings and lubricate as required. Check the Lubrication Chart for proper grades of grease.

Hydraulic Oil Reservoir

Whenever the dump body and hoist are lubricated, the condition and level of the oil in the reservoir tank should be checked. Dirty oil is the main cause of expensive pump and cylinder repairs. Dirty oil is detectable and should be replaced before considerable damage is done to the system. A sample from the dipstick will show its condition. Place a drip of the sample on a blotter, cloth or paper. Any noticeable residue means dirty oil.

Reservoir Level Check

Measure the oil level with the dump trailer hoist cylinder in the DOWN position. The trailer must be hooked up to the tractor. Remove the reservoir filler cap and inspect the oil level. Use care in filling the reservoir so that dirt or other foreign material does not get into the hydraulic system.

If the oil level is low, add enough hydraulic oil, which meets specifications, to raise the level. Do not overfill. Install the reservoir filler cap.

Draining Oil Reservoir

Oil should be changed at least once a year or sooner if it becomes contaminated. For the annual change, late fall is the best time as defects in the oil are likely to be most damaging in cold weather and when dump trailers are in storage. To drain the system, remove the reservoir drain plug and allow the oil to drain into a container. Reinstall the plug and fill the reservoir to the required level with the proper type and grade of oil.

Oil Recommendations

- Use standard SAE 5 or 10 weight non-detergent engine oil or equivalent hydraulic oil.

- Detergent oils are not recommended because the additives attack the cylinder packing.

- Never use crank case drainings, transmission oil, kerosene, fuel oil, water or any non-lubricating fluids.

- Never thin oil with kerosene or fuel oil in winter operation. Either of these will cause the packing to swell resulting in plungers sticking. Good low pour point hydraulic oils are available on the market.

Bleeding Telescopic Cylinder – automatic bleeder valve

Newer model trailers are equipped with automatic bleeder valves for the dump trailer hydraulic cylinder.

When working with the bleeder valve, if the unit is partially raised, it must be properly supported to prevent it from accidentally lowering.

By turning the cap counter-clockwise all the way out, the valve is in the automatic bleeder position. The valve will continuously bleed trapped air in the cylinder each time the hydraulic system is pressurized. This position eliminates time consuming, hazardous air bleeding maintenance and problems common to hydraulic systems with trapped air.

Turning the cap counter-clockwise not more than one turn off of the bottomed out or closed position will open the valve for manual bleeding. When a clear stream of oil is evident in the normal process of bleeding air from the cylinder, the cap should be turned clockwise to the closed position. This must be done periodically. When a cylinder is installed in a unit and is void of fluid, it is beneficial to bleed the air manually and then turn the cap counter-clockwise all the way out to the automatic position.

If the valve is malfunctioning, turn the cap clockwise until it is bottomed out. This position seals off the valve completely. Manual bleeding of the system can still be done until the valve assembly can be replaced. A clean hydraulic system is essential for proper valve operation. With each lifting cycle of the cylinder a small amount of

fluid will be discharged through the valve, which is normal and does not constitute a faulty bleeder valve assembly.

Bleeding Telescopic Cylinder – if manual bleeder valve is used

For smooth operation of the cylinder, it is advisable to bleed the air from the cylinder weekly. This is accomplished by: (see also: Lubrication Chart).

1. Empty the dump body of any material.
2. Remove the cover plate on the outside of the trailer from the dog house of the body to access the bleeder valve.
3. Fully extend the cylinder, raising the EMPTY dump bed.
4. Lower the dump trailer body to within one foot from the down position.
5. Using your fingers, turn the bleeder valve in a counterclockwise direction to open the valve and allow air to escape from the cylinder.
6. When a steady stream of oil comes from the bleeder, turn the valve in a clockwise direction until it is closed.

Lubricating Under Unusual Conditions

Lubrication intervals are based on normal operation. Lubricate more frequently to compensate for abnormal or extreme conditions such as: high or low temperatures; prolonged periods of high-speed operation, or operation in sand or dust. Any of these conditions may cause contamination and quickly destroy the protective qualities of lubricants. Intervals shown on the Lubrication Chart may be extended during inactive periods.
We suggest that all your inspections and lubrications be performed at your nearest Travis Body & Trailer, Inc. Service Branch. We know your equipment and are always ready to help you with your maintenance needs, repairs, or any other trailer services your new or used semi-trailer may require.

XIII. CLEANING

Periodic cleaning of your trailer is highly recommended as it both adds to the beauty of your equipment but will reduce the effects of oxidation, especially of steel components. Also it will enable the reflective tape, lights and reflectors to be more effective in doing their job.

Be sure to clean the warning stickers and other specifications stickers on the trailer as they are there for a purpose.

Although steam and pressure washing will eliminate heavy buildup, it will not remove the last layer of dirt buildup. Wiping with a damp rag (with or without detergent) while the trailer is still wet then performing a final rinse to the trailer will easily remove this film.

After cleaning the trailer should be thoroughly inspected for excessive wear, cracks and other damage. Appropriate action should be taken immediately for any defects found so that the condition does not worsen or create a safety hazard.

XIV. OTHER MANUALS

Travis purchases and installs many components and systems on the trailer which come with their own owners manual. You should be provided with a copy of these with your trailer. Included in this list would be the hydraulic cylinder, air ride suspensions, slat floor systems, etc. It is recommended that you further familiarize yourself with the information and maintenance procedures contained in these supplemental manuals.

XV. AIR PLUMBING

A specific plumbing diagram has been created for each trailer produced by Travis. In the event that you wish to alter the pluming scheme for your trailer , please contact Travis for a copy of the diagram used on your trailer. In most cases we will also be able to provide a suggestion for making the desired changes.

XVI. TROUBLE SHOOTING GUIDE

The following represents some of the common diagnostic and trouble shooting related questions.

BRAKES

1. Brakes will not release.

CAUSE: Brake shoes bound up at cams.
REMEDY: Lubricate.

CAUSE: Brake hoses restricted.
REMEDY: Replace Hoses.

CAUSE: Brake out of adjustment.
REMEDY: Adjust brakes.

2. No brakes or insufficient brakes.

CAUSE: Source of air supply shut off at tractor
REMEDY: Open cutout cocks at rear of tractor, push CV in.

CAUSE: Low brake line pressure
REMEDY: Check air pressure gauge on tractor, inoperative compressor

CAUSE: Reservoir drain cock open
REMEDY: Close.

3. Slow Brake Application or Release

CAUSE: Lack of lubrication.
REMEDY: Lubricate.

CAUSE: Excessive travel in brake chamber push rod.
REMEDY: Adjust brakes.

CAUSE: Restriction in hoses or lines.
RESOLVE: Repair brake valve or replace lines.

CAUSE: Defective brake valve
REMEDY: Replace valve

4. Grabbing Brakes

CAUSE: Oil, Grease or foreign material on linings
REMEDY: Reline brakes

CAUSE: Brakes out of adjustment
REMEDY: Adjust Brakes

CAUSE: Damaged internal brake chamber assembly.
REMEDY: See Service Facility

CAUSE: Leaky hose between relay valve & chamber.
REMEDY: Replace or repair.

5. Brakes Dragging

CAUSE: Out of adjustment
REMEDY: Adjust

CAUSE: Binding Cam, anchor pins or chamber rod end pins
REMEDY: Lubricate ands free up

CAUSE: Damaged brake assembly or drum out of round
REMEDY: Replace, see service facility.

WHEELS, HUBS AND TIRES

1. Wobbly Tires

CAUSE: Burnt, worn or damaged wheel bearings
REMEDY: Replace Bearings

CAUSE: Bent wheel or rim
REMEDY: Replace Wheel or Rim.

CAUSE: Bent Axle
REMEDY: Replace or straighten axle

2. Dog Tracking

CAUSE: Leaf Spring Broken

REMEDY: Replace COMPLETE spring stack.

CAUSE: Bent Axle
REMEDY: Replace or Straighten

CAUSE: Frame or suspension out of alignment
REMEDY: Straighten frame or align suspension

3. Uneven Tire Wear

CAUSE: Over under Inflation
REMEDY: Inflate to proper pressure

CAUSE: Loose wheel studs, nuts, or clamps
REMEDY: Tighten

CAUSE: Loose (or tight) wheel bearing
REMEDY: Adjust Bearings

CAUSE: Axle bent or out of alignment
REMEDY: Straighten, align or replace axle

CAUSE: Tires not properly matched
REMEDY: Match Tires

CAUSE: Improper acting brakes
REMEDY: Correct, adjust brakes

TWO SPEED LANDING GEAR

Difficulty in Turning Crank Handle

CAUSE: Bent crank shaft
REMEDY: Replace shaft

CAUSE: Bent cross shaft
REMEDY: Replace shaft

CAUSE: Lack of Lubrication
REMEDY: Lubricate

CAUSE: Gears or components damaged
REMEDY: Free up or replace

CAUSE: Jack screw nut jammed
REMEDY: Replace inner leg assembly.

ELECTRICAL SYSTEM

1. Loss of power, general

CAUSE: Circuit breaker kicks off
REMEDY: Correct short. Splice or repair wiring.

CAUSE: Wires burned or scorched
REMEDY: Replace wiring.

CAUSE: Contact points dirty or corroded.
REMEDY: Remove lamp unit and clean

CAUSE: Loss of ground at bulb
REMEDY: Repair as necessary

2. Complete loss of trailer lights

CAUSE: Broken main harness
REMEDY: Repair or replace wire

CAUSE: Blown fuse
REMEDY: Replace fuse

CAUSE: Broken ground lead between tractor & trailer
REMEDY: Check, repair or replace jumper cable

CAUSE: Loose or corroded connection in ground lead between tractor & trailer
REMEDY: Repair or replace

3. Dim or flickering lights

CAUSE: Battery on tractor not charged
REMEDY: Charge battery

CAUSE: Damaged wire in jumper cable
REMEDY: Repair or replace wire

CAUSE: Dirty or corroded contact blades in coupling socket
REMEDY: Clean contact blades

CAUSE: Loose connection
REMEDY: Repair as necessary

CAUSE: Poor ground at socket
REMEDY: Repair as necessary

HOIST RELATED

1. Hoist will not raise

CAUSE: Insufficient oil level
REMEDY: Fill reservoir to proper level

CAUSE: Restriction of oil flow
REMEDY: Remove restriction

CAUSE: Pump is worn
REMEDY: Repair or replace pump

CAUSE: Hydraulic hose not connected
REMEDY: Connect hose

CAUSE: Restricted control linkage
REMEDY: Check and repair

CAUSE: Broken key or key way in drive
REMEDY: Repair or replace key or key way

2. Hoist will not hold

CAUSE: Air in hydraulic system
REMEDY: Bleed system or repair/replace valve

CAUSE: Valve control lever not in hold position
REMEDY: Check and repair linkage

CAUSE: Worn control valve
REMEDY: Replace or repair valve

CAUSE: Worn pump
REMEDY: Replace or repair pump

3. Body raises erratically

CAUSE: Air in system
REMEDY: Bleed system of air

CAUSE: Insufficient oil supply
REMEDY: Bleed system and fill reservoir to proper level

CAUSE: Loose or damaged connections
REMEDY: Tighten or replace

CAUSE: Oil too heavy, contributing to cavitation
REMEDY: Drain system, replace with recommended oil

CAUSE: Broken or loose bleeder valve
REMEDY: Tighten and or replace valve

CAUSE: Worn pump seals
REMEDY: Replace or repair pump

AIR RIDE SUSPENSION

1. Axles are not equalizing

CAUSE: Suspension ride height varying due to sloping trailer
REMEDY: Correct tractor fifth wheel height

CAUSE: Incorrect air spring
REMEDY: Replace with correct part

CAUSE: Restriction in air lines
REMEDY: Clear components and/or lines

2. Trailer tracks off from side to side

CAUSE: Missing alignment collar welds
REMEDY: Repair welds

CAUSE: Failed pivot bushing
REMEDY: Replace bushing

3. Bushing walk

CAUSE: Incorrect alignment
REMEDY: Re-bush suspension and realign

4. Shocks breaking

CAUSE: Incorrect ride height
REMEDY: Adjust height control valve

CAUSE: Incorrect shock bolt torque
REMEDY: Replace and correctly torque mounting bolts

XVII. WIRING DIAGRAM – TYPICAL

Travis produces many of variations to this typical wiring diagram. If you are in doubt as to your exact wiring scheme, please contact the factory for a diagram.

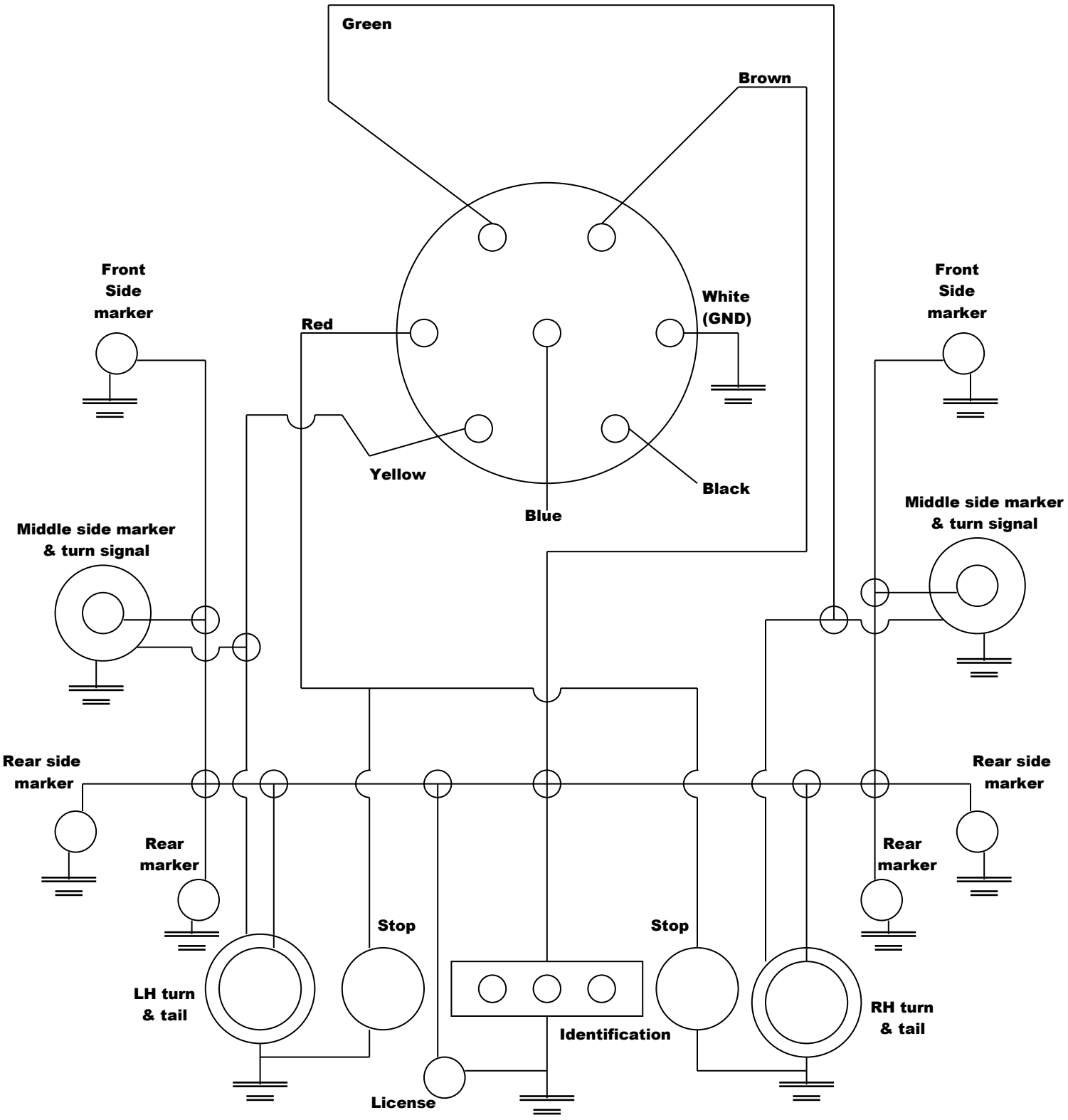

XVIII. ALUMINUM BOTTOM DUMP OPERATIONS

Please read the standard owner's manual completely before proceeding with this section. General safety information is contained in the rest of the owner's manual. The items covered in this section are specific to the Aluminum Bottom Dump trailer and are an important and permanent part of the complete owner's manual.

Only qualified personnel should operate the trailer. Several warning labels are present on the trailer. A complete understanding of all warnings is necessary before operating the trailer.

Only qualified personnel should perform maintenance. Alterations to the trailer could affect the structural integrity. Before welding on the trailer, obtain written authorization from the manufacturer. Substituting components other than those provided by the manufacturer may void the warranty.

After following the general pre-trip checklist (page 15), there are several specific checks to be performed on the bottom dump.

1. Ensure the air system has no leaks.
2. Ensure the gate restricting chains are properly and equally secured.
3. Check that the oiler is full and functioning properly when the gates are opened. Proper oil should be used to lubricate the system.
4. Ensure the safety switch is in the locked or travel position when the trailer is in the travel mode.
5. If the cab control box is in use, ensure that both sets of controls are checked.

TYPES OF DUMPING

The trailer may be used to dump the load in several ways. To dump over a pit or conveyer, the gates are normally opened completely while the trailer is stopped. It may be necessary to close the gates if the pit cannot move the material away fast enough.

Dumping while moving to create a windrow of material is another way to release the load. Adjusting the opening of the gates and the speed during the dump will affect the size and length of the windrow. Opening the gates to the desired position and traveling at a speed of 15 to 30 miles per hour will accomplish the spreading of gravel. Care should be taken to maintain the necessary ground clearance to avoid damaging the trailer. When dumping while moving, the truck and trailer should travel only in a straight line.

DOOR CHAINS / PIN BAR

All trailers are provided with gate limiting chains as standard equipment. There are two chains that limit the opening of the doors, one on each end of the doors. Only original Travis chains should be used to secure the doors. When not using the limiting chains, ensure they are stowed securely on their hooks. When using the chains to limit the gates, ensure they are completely engaged in the doors with the chain eye locks properly engaged so the chain cannot dislodge. The chains on front and back must be identical length to restrict the doors equally. Failure to do so will result in warped or damaged gates. Check chains weekly for wear or damage. When installing the chains in the chain eyes, insert the

chain end from the inside of the door so the end hangs on the outside of the door. Ensure the excess chain will not catch on anything.

Great care should be taken if operating the doors from the side of the trailer. The gates should not be operated from the side of the trailer while the trailer is moving. Operation of the gates from the truck is the preferred and suggested method. The air cylinders create large forces when opening and closing the gates. **All personnel should be cleared from the immediate area of the gates before operating them**. The operator should always remain at the controls while dumping.

Your trailer may be equipped with optional pin bars in place of the limiting chains. The pins must be in the same holes both front and back. Only original Travis parts should be used. Ensure the pins are completely installed with their locking tabs rotated down to lock them in place. Hole one location allows almost no gate opening. Holes two through six allow seven-inch increments of gate opening. Hole seven will allow the gates to open completely. Removing the pins and opening the gates completely, hole six will hold the gates in their open position. The pin bar should not be used as the only means to secure the gates open for maintenance.

DUMP CONTROLS

The control of the gates is located in two places. The first is on the driver's side of the trailer at the rear. The key switch should remain in the locked or travel position to ensure the gates remain closed until ready to dump. Removal of the key is suggested to prevent unintended dumping of the load by others. The toggle switch that opens and closes the gates is only activated when the key is in the unlocked or dump position. A light is provided to give visual feedback that the toggle switch is armed or disarmed by the key lock. Travis provides the in-cab control box. To connect this in the truck cab, a 12-volt supply is connected to the red lead and the black lead is connected to ground. The remaining wires are connected to the 4-way plug so that the color-coded wires are connected to each other. The 24 ft. length of wire to the 4-way plug should be routed out of the cab and to the front of the trailer taking care not to pinch or rub the wire causing a short.

12-volt power MUST be supplied to the blue wire on the main 7-way for the trailer controls to operate properly!

Properly connected, the trailer controls will operate the gates even if the in cab control box is not connected to the trailer.

If the in cab control box is connected to the trailer, it's key lockout overrides the key lockout on the trailer. To operate the trailer from the controls on the trailer, the in cab key lockout must be in the unlocked position.

Any rewiring of the trailer may void the warranty, cause damage to the trailer, or cause a failure to the safe operation of the trailer.

AIR RESERVOIRS

The trailer has at least one small air reservoir and one large air reservoir (60 gallons). Air pressure should never exceed 120 psi. The small air reservoir fills first and is used for the braking system. A pressure protection valve protects this reservoir. Should the system pressure drop below 70 psi, this valve closes. Once the air pressure in the brake reservoir reaches the preset limit, the pressure protection valve opens and air begins to fill the 60-gallon air tank. This may take several minutes depending upon on the truck's air compressor

capacity. All trailers are provided with an external outlet with a female quick release fitting to fill the air system by an external source. The outlet of the 60-gallon tank has a ball valve to disconnect it from the valves that operate the gates. After closing the valve some residual pressure may remain in the system and the gates may still partially operate.

Any maintenance on the trailer should begin only after the entire air system is drained and the gates are positively secured.

FILTER AND OILER

Your trailer is equipped with a general-purpose filter to capture liquids and small debris. An oiler is also included to properly lubricate the air cylinders. The filter and oiler are located on the driver's side of the trailer in front of the suspension. Regular maintenance of these components is critical to the proper functioning and life of the air cylinders. Refer to the included documentation for details regarding servicing and functions. A ball valve is provided at the exit of the 60-gallon air reservoir. Before servicing the filter or oiler, always be sure to shut off the air supply and operate the gates to release any internal pressure. As an added safety precaution, it is suggested that before servicing any part of the air system, it is recommended that you completely drain all air reservoirs.

The gates close under great force, and can do so quickly. Any cleaning or maintenance of the gates or inside of the trailer should be done so with great care and only by authorized personnel. The entire air system should be drained before entering the trailer or gate area. The gates should be properly blocked open before entering the trailer. Even with the air system drained, the gates may close under their own weight.

UPPER COUPLER

Your trailer comes standard with a rocking upper coupler plate. This allows the trailer to move independently from the truck through a range of seven degrees left or right. This freedom of movement is necessary to reduce unwanted forces from being transmitted from the truck to the trailer. If the truck is equipped with fenders, you should ensure the trailer will not engage with them when the coupler plate is rotated completely to either side. The truck's fifth wheel should remain unblocked and have the ability to rotate forward and back. The combination of these two degrees of freedom of motion should ensure a completely flexible yet solid connection between the trailer and the truck.

LANDING GEAR

Your trailer comes standard with drop legs to hold the trailer up when disconnected from the truck. The legs should be secured in their storage collars on the underside of the trailer immediately in front of the gates when not in use. **A loaded trailer should never be dropped on these legs**. To disconnect from the trailer, remove the legs from storage. Install the legs into their brackets and pin them securely and equally. The legs should touch the ground or be no further than 1" from the ground. Adjust the legs to ensure such. Blocks may be necessary to reach areas that are further than 1" from the bottom of the legs. If the tractor is equipped with an air ride suspension, release the air to lower the trailer gently to the ground. Release the fifth wheel lock and disconnect all air and electrical connections. Slowly pull out from under the trailer. Hooking and unhooking from a trailer should always be done

with the trailer and truck in-line and never at an angle. Hooking up to the trailer should be done in the reverse order. Remember, great care should always be taken while hooking and unhooking from a trailer to avoid damage to the truck and trailer.

PUSH BUMPER

An extended push bumper is available as an option. The trailer should never be lifted from the push bumper. The engaging equipment should be in-line with the trailer and should not engage the bumper from the side. The bumper is designed to be engaged with a dozer blade or front-end loader bucket edge. The push bumper is the only location that the trailer should be pushed and engaged. The push bumper has a rear underride structure that meets the guidelines in FMVSS 224 & 224. It must be maintained as manufactured to comply with the regulations.

WINDROW DEFLECTOR

Your trailer comes equipped standard with a windrow deflector to protect the suspension, brake chambers, slack adjustors, and axles. The deflector is comprised of two components. The first is a steel tube that is securely welded to the front axle. The second component is a UHMW plastic shield that hangs from the front of the aluminum subframe. The plastic flap should hang close to the ground when not in use. When dumping, the windrow will push the plastic back into the steel bar and wrap under it forming a protective shield. This two-component system will minimize the amount of material that can directly contact the suspension components. It is recommended that the suspension area be cleaned regularly to prevent build up of material on the suspension components that made lead to a failure. Damage to either windrow component must be immediately repaired to prevent further damage to the trailer.

LADDERS

Your trailer comes equipped standard with a ladder on the front of the trailer. Care should always be taken when climbing on the trailer. The operator must utilize his truck frame to gain access to the front of the trailer. Care should be taken to avoid tripping hazards on the truck such as air hoses, electrical wires, fifth wheel hardware, and incompletely covered truck frames. The footsteps on the trailer are covered with a grip tape that may wear

or become filled with contamination. It is recommended that you keep the steps clean and replace any worn or missing grip tape. Grab handles are provided to provide a safer climb. Never stand erect while climbing on the ladder. The operator should bend at the waist or bend his legs to lower himself from an erect position so he can grab the handles with his hands. Climbing on the trailer should be approached like a ladder rather than a staircase. The grab handles should always be used when climbing on the trailer. No inside steps are provided in the hopper. The ladder is provided only to inspect the inside of the trailer, not to assist in entering the trailer hopper. Climbing on the trailer should never be done while the trailer is being loaded or unloaded. No one should be on the trailer while the trailer is in motion.

ADDENDUM TO OWNER'S MANUAL FOR THE STEPS, LADDERS AND CATWALKS

Please read the standard owner's manual completely before proceeding with this addendum.

Only properly trained, qualified personnel should operate the trailer. Several warning labels are present on the trailer. A complete understanding of all warnings is necessary before operating the trailer. However, safe operation of the trailer extends beyond observing the written warnings and being familiar with the commonly anticipated dangers, it requires that the operator be both physically able to perform the tasks necessary and capable of using good judgment to avoid accidental injury to himself or others.

Only qualified personnel should perform maintenance. Alterations to the trailer could affect the structural integrity and safety. Before welding on the trailer, obtain written authorization from the manufacturer. Substituting components other than those provided by the manufacturer may void the warranty and may render the trailer unsafe. Damage and/or extensive wear to the trailer can render the trailer unsafe for normal operations.

Inspect all steps and ladders before using them. Normal trailer inspections should include an inspection for damaged, worn, or missing steps. Repairs or replacement by a qualified person should take place before attempting to use the steps.

Extreme care should be taken when any personnel attempt to climb upon a trailer. **Never** attempt to jump onto the trailer. **Never** attempt to jump from the trailer. Possible injury could result from a fall from a trailer. Any dirt or other foreign material should be cleaned from the steps to remove the possibility of loosing traction or grip. **Always** use both hands when climbing on a trailer. Do not attempt to climb on the trailer if you are physically limited in doing so.

Steps are standard equipment on most trailers to allow access into the trailer from the ground or from the frame of a truck. Typical locations for the steps are: the driver's side of the nose, and the driver's side rear side just above the trailer tandem. The steps are cast aluminum and are solid welded to the trailer body. The steps have a load rating of 300 pounds. As is common in the dump and trash trailer industry, the standard steps are used as both hand holds and steps.

When using the steps at the rear of the trailer, it is necessary to use the trailer tires for your feet while the steps on the side of the trailer can be reached with your hands. Great care should be taken here since wet or muddy tires may be very slippery. Take good hold of each step when embarking and disembarking and advance slowly and cautiously only after securing a solid grip.

Tarp rods are offered as an option on some trailer models. Tarp rods are the aluminum flatbar that extends horizontally on the sides the full length of the trailer approximately 15" up from the bottom of the rubrail. Tarp rods are specifically designed to secure tarp straps and bungee cords. Tarp rods are **not** designed to be walked on. Personnel should **never** attempt to move down the side of the trailer by walking on the tarp rods.

Never use the steps as an anchor or tie down. Steps should **never** be used as a crane hook attachment point.

Ladders are offered on some trailer models. The ladder rails on either side are made from round pipe and are designed to grab hold of while climbing. The rungs of the ladder are designed to be slip resistant for your foot. The rungs on this style of ladder are not designed as a hand hold. The same general precautions for steps also apply to ladders.

Catwalks are offered on some trailer models. Normally a ladder is provided to climb to the catwalk. Catwalks have a grip enhancing walking surface. A toe board is provided to keep your foot from slipping off of the catwalk edge on all sides except the side that the ladder is located. A railing is provided to enclose the catwalk area. A chain with a latch is provided to enclose the side of the catwalk that the person enters from the ladder. The chain should **always** be secured **immediately** upon entering the catwalk. The same general precautions for steps also apply to catwalks.

Tarp systems installed in the after market may interfere with the safe use of steps and ladders. Ensure that all steps provide the clearest and safest entry possible. It may be necessary to relocate or add steps after a tarp system is installed.

Steps and ladders are customer specified or customer accepted items on each trailer. Travis cannot guarantee the suitability of the configuration, style or design of steps and/or ladders for subsequent owners of the equipment. Operators, leases and other non-owners that use the trailer must be trained in the proper and safe use of the trailer including the use of steps, ladders and catwalks.

ADDENDUM TO OWNER'S MANUAL FOR THE TOTE DUMPING TRAILER

Please read the standard owner's manual completely before proceeding with this addendum. General safety information is contained in the standard owner's manual. The items covered in this addendum are specific to the Aluminum Tote Dumper trailer and should be considered an important and permanent part of the complete owner's manual. Please keep this addendum with the general Owner's Manual for future reference.

Only properly trained, qualified personnel should operate the trailer. Several warning labels are present on the trailer. A complete understanding of all warnings is necessary before operating the trailer.

Only qualified personnel should perform maintenance. Alterations to the trailer could affect the structural integrity and safety. Before welding on the trailer, obtain written authorization from the manufacturer. Substituting components other than those provided by the manufacturer may void the warranty and may render the trailer unsafe.

After following the general pre-trip checklist in the general Owner's Manual, there are several specific checks to be performed.

HYDRAULIC SYSTEM

The hydraulic system is designed for a maximum working pressure of 2,000 psi. **Ensure the truck's relief valve is set to 2,000 psi or less**. Excessive pressure may cause lines to burst, fittings to leak or fail, or valves to fail. Injury to the operator or others near by could result from a hydraulic system failure. All hydraulic hoses, fittings, and valve should be checked regularly for leaks or damage. Hydraulic fluid is under extreme pressure and could cause serious bodily harm. Immediate actions should be taken to shut the trailer down and make the necessary repairs should any deficiencies be found.

LOADING THE BUCKET

Your trailer has been designed with many features to assist in various types of loading. One type of load is a four-foot square box mounted on a pallet. Another is a 44-gallon plastic tote. Customized applications are also available. All loads should be secured properly before attempting to load the trailer.

Loads should always be centered in the bucket. If only one tote is loaded into the trailer, it should be in the center position. If two totes are loaded into the trailer, they should be in the two outermost positions. Three totes loaded at once is an evenly distributed load. The bucket comes with folding dividers that are used for 44-gallon totes as well as 55-gallon drums. Ensure the pins are fully engaged in the floor to secure the dividers in the deployed position. Ensure the proper stops are in place to engage with the top of the drum. Ensure the gravity activated flip plates are free to rotate and capture the drum. If you are loading large pallet mounted boxes, ensure that the cross pipe is secured in the proper position to capture the container and keep it from unloading into the trailer with the contents.

The trailer is designed with a **bucket load limit of 3,000 lb**. Loads in excess of the maximum rating may cause damage to the trailer and could endanger the operator or others nearby.

BUCKET OPERATION

All personnel should be cleared from the immediate area of the bucket and arms before operating it. There are many moving parts and pinch points while the trailer is in operation. Personnel not operating the trailer should **never** be in the immediate vicinity of the trailer. The operator should **always** remain at the controls while loading the trailer or dumping it. Personnel should **never** stand in the bucket. **No safety provisions** are made for personnel to use the bucket as a lifting device.

A beeping alarm sounds when the arms or bucket are in motion. The alarm does not give any advanced warning of impending motion of the trailer operations, but rather a warning that a part of the trailer is in motion. The alarm is a safety device only and should not be relied upon solely as the only warning for safe trailer operation. The alarm should never be disconnected. The alarm should immediately be repaired or replaced should it malfunction or be damaged.

A radio transmitter controller is standard equipment to operate the bucket. It allows the operator to remain a safe distance from the trailer while it is in operation. The controls have an effective **working range of 75 feet**. Low battery power in the transmitter will decrease the working distance. 12-volt power must be maintained to the trailer through the blue wire in the 7-way plug to operate the controls. An emergency stop button is provided and will override all other extraneous signals to stop the trailer operations. Care should be taken while handling the controller to avoid accidental operation of the trailer.

A manual control box is available as an option. It is attached to the trailer by a wire cable. The control box and wires should always be kept stowed in the storage box when not in use. Care should be taken to avoid tangling the control cable. Regular inspections should be performed on the cable to ensure no damage has occurred to the cable. A damaged cable could cause sudden and unexpected movement of the bucket and cause bodily harm. Only one set of controls should be operated at a time. Two different people should **never** operate the manual and radio remote controls at the same time. Bodily harm to an operator could occur from unexpected movement of the bucket or trailer.

A master key switch is provided to shut off all power to the controls. This master switch should always be in the off position except when the operator is at the controls and loading or dumping the trailer. The master switch **must** be in the off position before traveling with the trailer.

The bucket is raised and lowered by two main hydraulic cylinders, one on either side of the trailer. The controls are designed to hold the bucket stationary when no controls are engaged. Separate controls operate the raising and lowering. A secondary hydraulic cylinder on either side of the bucket rotates it in and out. The controls are designed to hold the bucket stationary when no controls are engaged. Separate controls operate the rotation of the bucket in and out.

Care should be taken so the bucket does not engage with any part of the trailer except the travel hooks when stowing the bucket for travel. Rubber stops are provided on the top of the bucket in case of accidental contact with the toprail. This could occur while the arms are completely raised the bucket is rotated too far forward while dumping the load. These stops are **not** to be used to suddenly and violently stop the bucket motion to help dislodge a stuck load. Lower the bucket and take alternative actions so the load will release freely into the trailer.

Stops with rubber pads are designed to limit the main arms at the ends of the range of motion. The stops **must** be maintained to prevent the main hydraulic cylinder from completely reaching its internal stroke limits. Because the rubber stops may wear at different rates, it may be necessary from time to time to add a shim under the rubber stop on one side

to maintain a synchronized contact on each side of the trailer. A damaged or missing stop on one side will

cause excessive forces in the bucket, arms, and trailer and result in damage or failure of the trailer. Once the arms have reached the stops, do not continue to attempt to force them further. **Do not** use the upper stop to suddenly and violently stop the bucket motion to help dislodge a stuck load. Lower the bucket and take alternative actions so the load will release freely into the trailer. When lowering the bucket to the ground, care should be taken to level the bucket and gently contact the ground. **Do not** force the bucket against the ground once contact has been made. Forcing the arms against the stops, the travel hook, or the ground once contact is made may **damage the cylinders** or the trailer.

An electrical limit switch is located on either side of the bucket. When the bucket is lowered into the travel hooks, one or both of the limit switches are actuated which cuts off the flow of hydraulic fluid to the main cylinders. This ensures that the cylinders and travel hook are not damaged. The switches restrict only the downward motion of the bucket at this point. The bucket may be raised at any time. The switches should be properly maintained and inspected regularly.

DUMPING THE TRAILER BODY

A separate manual valve located at the front of the trailer raises the trailer body. The controls are designed to hold the bucket stationary when no controls are engaged. Separate controls operate the raising and lowering of the trailer body. Please refer to the standard owner's manual for instructions and warnings concerning dumping the body. Before raising the trailer body, the bucket **must be raised** above the tailgate so the gate can swing freely and allow the payload to exit the trailer.

Check for overhead obstructions before lifting the body or operating the bucket. At least 32 feet of overhead ground clearance **must** be maintained for safe operation of the trailer and bucket. Power lines contacting a trailer can cause extreme damage to the trailer and can result in death of an operator.

SIDE CLEARANCE

Your trailer complies with the 96" overall width restriction found in some parts of the country. The actual trailer body is much narrower than 96" wide. Great care should be taken when passing near other obstructions. The bucket, arms, pivot pin extend well beyond the side of the trailer. At least five feet of open space should be maintained to ensure clearance.

REAR UNDERRIDE COMPLIANCE

Your trailer is compliant with FMVSS 223 & 224. The bucket **must** be secured in the bucket travel hooks when moving. The bucket and travel hooks must be maintained as manufactured to comply with the federal regulations.

Tote Dumper Radio controls

FREQUENTLY ASKED QUESTIONS

Q. Can electrical noise or other transmissions cause Lodar to start by mistake?
A. No. We use a digital coding system, asking the Receiver to recognize a specific code from the Transmitter 12 times per second before anything will happen.

Q. Will any two Transmitters work each other's Receivers.
A. No. Each system is individually coded.

Q. What is the power output?
A. Approx. 50 milliwatts.

Q. What batteries are used?
A. The Transmitter uses a PP3 9volt Heavy Duty Alkaline for maximum performance- the Receiver uses the 12/24-volt supply from the vehicle.

Q. Are there two systems, one for 12 volt and one for 24 volt?
A. No - the Receiver works from 9 volts through to 32 volts.

Q. How long does the battery last in the Transmitter?
A. It depends on its usage, but typically six months.

Q. How do I know when to replace the battery?
A. The LED light will get dimmer and the operational range will get shorter.

Q. Will we interfere with other emergency systems?
A. No. Other services are a long way from our frequency. Anyway, the digital coding system keeps control of that issue

Q. How long does it take to fit a Dual Function Lodar?
A. The system can be fitted in under an hour - honestly!

Q. Will extreme heat or cold effect Lodar?
A. The system has been tested down to - 10Deg C and up to + 85 Deg C. It will work in colder conditions, down to - 30 Deg C but the range will be slightly reduced.

Q. What happens if I lose my Transmitter?
A. Contact the person who sold you the unit, quoting either the Serial number on the Receiver or, better still, the code on the strip on the side of the Receiver. A new Transmitter can be on its way to you in hours.

Q. Does the equipment meet all the industry standards?
A. Yes. We obtain all the necessary approvals of the countries in which we sell Lodar, although, within the EEC, certain approvals cover the whole of the EEC.

Q. What is the maximum range?
A. Typically 60 meters although longer ranges have been achieved. In very cold conditions, however, down to -30 Deg C for example, the range will be reduced.

FAULT FINDING

INTERMITTENT ON BOTH SIDES / VERY SHORT RANGE

Check:

1.that the battery in the Transmitter is good and that the light is bright.

2.that the voltage at Terminal 5 (Positive) is more than 9v when ALL functions on the vehicle are being used. (Even new vehicles can have voltage leaks!)

3.that you have a proper ground.

4.that all connections are tight.

5.that the relays in the Receiver are holding in when you walk away from the vehicle with the Transmitter on. If not then move the Receiver to a different position for better reception.

DEAD ON BOTH SIDES

Check:

1.that the battery in the Transmitter is good and that the light is bright.

2.that the code in the Transmitter matches the code in the Receiver (see Transmitter Code)

3.that the voltage at Terminal 5 (Positive) is more than 9v when ALL functions on the vehicle are being used. (Even new vehicles can have voltage leaks!)

4.that you have a proper ground.

5.that all connections are tight.

6.that the relays in the Receiver are activated (put your ear to the Receiver box). If they are not activated then check the supply. If they are activated then you will have an output problem in the Receiver. Change both Transmitter and Receiver.

INTERMITTENT / DEAD ON ONE SIDE

Check:

1.that the Transmitter light is working on BOTH sides when pressing the buttons. If not then you may have a faulty Transmitter.

2.that all the connections are tight.

3.that BOTH relays in the Receiver are working. If not then you may have a faulty Receiver.

4.that BOTH outputs in the Receiver are O.K. If only one works then change around connections at Terminals 6 and 7. If the fault is then transferred on the vehicle then you have a fault in the Receiver; if the fault stays on the same side on the vehicle then the fault lies with the vehicle, not LODAR.

LODAR RETURNS / EXCHANGE

It is our policy to exchange both Transmitter and Receiver together whenever a problem occurs that cannot be resolved. Before returning LODAR for exchange please do talk to us and try to be specific when describing the fault. **Always have the serial number to hand as well as any additional information (see "Warranty and Returns")**

GENERAL COMMENTS ON RADIO EQUIPMENT

Every effort has been made to make your LODAR as reliable as possible and they are all tested before they are sold. However, we can have the occasional faulty component, we can get the odd dry joint, both of which will not

necessarily show up in testing. Indeed, LODAR could go many months before this problem might occur. PLEASE ALSO NOTE THAT RADIO EQUIPMENT, OF ANY TYPE, CAN BE SUBJECT TO ATMOSPHERIC CONDITIONS SO YOU MAY HAVE ENCOUNTERED JUST SUCH A SITUATION. MAKE SURE THE FAULT HAS RE-OCCURRED BEFORE REPORTING ANY FAULTS.
Please carry out these simple tests when you have any problem and we are sure you will be able to identify the cause - often it is a flat battery, sometimes LODAR is not fitted as well as it might have been, often it is the hydraulic valves being a bit lazy. Whatever the problem, we are always here on the end of the telephone so do call us, fax us or send an email.

WARRANTY AND RETURNS

LODAR has a 2 year unlimited warranty. We will replace free of charge any product that is proved to be faulty, due to manufacturing, during that period. The warranty period is taken from the date of invoice that the goods leave our factory; we will accept a later date if the distributor can show that the goods were purchased from them within the two year period.

If you have a problem please follow this procedure;

Call your Distributor or the person from whom you purchased LODAR. They have instructions to replace, as new, both Transmitter and Receiver within this two-year period. Return the faulty Transmitter and Receiver to the Distributor, making sure it is packaged to avoid any damage.

If you do not receive satisfaction you may always contact us directly. We are only a telephone call and a UPS shipment away!

USE OUR TELEPHONE SERVICE

USA SALES	1 888 685 6327
USA SERVICE	1 940 476 2520

ADDENDUM TO OWNER'S MANUAL FOR POLISHED TRAILERS

Please read the standard owner's manual completely before proceeding with this addendum.

Travis builds many different models of trailers. We offer a variety of options to better suit the trailer to each individual customer's needs. In recent years, Travis has begun to offer highly polished sheet and extrusions on some trailers. The mirror finish adds greatly to the trailer's aesthetics.

A highly polished trailer will reflect sunlight extremely well. Care should be taken when parking the trailer near combustible materials. Curved extrusions and sheet with a slight concave shape can focus the sunlight's energy enough to ignite combustible materials nearby. Ensure all such combustible materials are kept far enough away from the trailer to avoid starting a fire.

ADDENDUM TO OWNER'S MANUAL FOR AIR SYSTEM ADDITIVES

The use of additives in the air brake system is NOT recommended. They can be harmful to the performance of air valves, braking system, and general overall trailer performance. Use of ANY additives will void your warranty.

ADDENDUM TO OWNER'S MANUAL FOR TIRE INFLATION

The tires supplied on your trailer(s) are inflated to the manufacturer's recommendations.

They were inflated to the maximum recommended pressure - as stamped on the sidewall of the tire.

We recommend that you check the tire pressure immediately upon delivery, and ensure the pressure is correct for your application. Tire safety is critical to overall safe vehicle operation.

As you are aware, many things affect the proper tire inflation, and performance, including: tire make, model, size, tread pattern, as well as payload weights, elevation or changes in elevation, ambient temperature and changes in temperature, loaded versus empty miles, speed. Many other conditions can also affect tire safety, overall vehicle safety, and tire life.

Please consult a tire professional for the optimal pressure setting for your tires.

The American Trucking Association (ATA) has publications offered by "The Maintenance Council" (TMC) which are very helpful in managing your tires. Contact ATA Business Solutions at 866-821-3468 or order online at http://www.atabusinesssolutions.com. You do not have to be a member of the ATA to purchase this publication.

If your trailer is equipped with an optional tire inflation system, you should also consult with the manufacturer's operators manual to ensure it is set properly to maintain the proper tire inflation setting for your application. The setting of the system should be adjusted after purchase to your desired setting. Note that these inflation systems will inflate the tires to the customer's desired pre-set pressure, but they do not deflate. It is still recommended that you check the tire pressure manually to be safe.

ADDENDUM TO OWNER'S MANUAL FOR T-LITE SUSPENSION AND 5.2K AXLE

There are state bridge laws which may vary from the Federal bridge law. The Federal bridge law is designed in such a way that a typical tractor with a steer axle and two drive axles coupled to a 39 ft trailer with two axles (5 total axles on the combination) will normally meet the inner and outer bridge laws to gross 80,000 lbs. The Federal bridge law allows for more axles to be added to the truck or trailer. Typically, the same truck in the example above coupled to a 35 ft trailer with three axles (6 total axles on the combination) will also meet the inner and outer bridge laws to gross 80,000 lbs. Typically, the same truck in the example above coupled to a 26 ft trailer with four axles (7 total axles on the combination) will also meet the inner and outer bridge laws to gross 80,000 lbs. Adding a 13,000 lb rated third suspension, axle, hub and drums, and full size (11R24.5) tires and wheels traditionally added 1,500 lbs to the trailer. Some of the weight added is offset by the shorter trailer length. Unfortunately, though, the shorter triaxle trailer was typically still 1,000 lbs heavier than the 39 ft tandem trailer. So with respect to gaining payload, going to a shorter trailer with more axles did not make sense. However, the Federal bridge law does not have a restriction on the minimum amount of weight that any individual axle must carry. A few state bridge laws do incorporate a minimum amount per axle required. Please check your state laws to verify if they vary from the Federal bridge law.

To take advantage of the shorter trailer length that the bridge law allows, and to avoid the weight penalty of the traditional 13,000 lb rated suspensions, Travis designed the T-Lite suspension and axle. The axle is rated to carry 5,200 lbs. The tires are small (typically 215/85R16) and are rated at 2,700 lbs per tire. The suspension is full air ride with the lift bags incorporated into the suspension. The braking system is electric and tied to the stop light power. There is an electronic limiter so the brakes do not engage fully and slide the tires during use. The ground force is regulated down by air pressure so the axle only pushes down on the ground with about 1,500 lbs of force. This entire suspension and axle package weighs 1,000 lbs less than the traditional 13,000 lb setup. By creating such a light weight suspension, Travis is able to produce shorter trailers with more axles and still equal the weight of the baseline 39 ft tandem trailer.

Unfortunately as with many weight reductions on a trailer, there are trade-offs. In the case of the 5.2k axle, it is a smaller diameter axle (3" diameter versus a traditional 5" diameter full size axle). This makes the axle more susceptible to being bent if it impacts a curb, railroad, etc. The electric brakes require adjusting since there are no automatic slack adjusters. The bearings require servicing at more frequent intervals than a traditional large diameter axle. Please see the owner's manual for the 5,200 lb axle for details regarding maintenance. If these differences from the traditional large diameter axle are manageable by your maintenance department, then the weight reducing advantages of the T-Lite suspension can be realized on your trailer.

ADDENDUM TO OWNER'S MANUAL FOR TRAILER WATER TIGHTNESS

Travis attempts to provide a trailer that will haul loads that are moist or contain liquids. Our warranty expressly excludes guaranteeing a water tight trailer. When informed by the customer at the time of order, Travis will water test the trailer and make every attempt to build a trailer without pinholes and / or leak points. However, trailers that are built well can, and do, still develop instances of drips or leaks over time. The repair of these leaks must be included in normal maintenance and is not covered under warranty.

ADDENDUM TO OWNER'S MANUAL FOR TRAILER FIT, FINISH, AND WELD APPEARANCE

Travis attempts to provide the highest quality trailer available. Each trailer contains hundreds of feet of welds – some machine welds and some hand welds. Each and every weld on the trailer serves a purpose. First, and foremost, the welds need to be structurally sound. Second, they should be consistent and neat in appearance. Welds on the outside of the trailer are given more attention with respect to appearance than welds on the inside of the trailer, or underneath. Travis strives for perfection in every weld. We attempt to balance quality with quantity and efficiency. Unfortunately, welding is not an exact science, but rather is highly reliant in great part on the hand that is making the weld. Also, welding machines have failures or minor malfunctions which will result in a less than perfect weld.

Although perfection of every weld is our goal, there are times when that it is not achieved. Historically, Travis has set the bar very high for weld quality. In those instances that we only come close to perfect, it is more evident - given our high standards. We pass each and every trailer through an exhaustive list of quality control inspections. Sometimes welds must be re-welded prior to leaving the factory. Unlike steel (which can be ground out, and then painted to hide imperfections), aluminum welding is much less forgiving. When the trailer is shipped, it has passed Travis inspections and met our minimum level of quality criteria.

Weld quality has an aesthetic element. Since judgement can be influenced by past experiences, knowledge, tastes, etc., weld appearance is not an acceptable reason for rejection of a trailer by a customer.